SECTION BRC
BRAKE CONTROL SYSTEM

CONTENTS

ABS

PRECAUTIONS 4
Precautions for Supplemental Restraint System (SRS) “AIR BAG” and “SEAT BELT PRE-TENSIONER” 4
Precautions for Brake System 4
Precautions for Brake Control 4
PREPARATION 5
Commercial Service Tools 5
SYSTEM DESCRIPTION 6
System Diagram 6
Functions 6
ABS 6
EBD 6
Operation That Is Not “System Error” 6
ABS 6
Hydraulic Circuit Diagram 7
CAN Communication 7
SYSTEM DESCRIPTION 7
TROUBLE DIAGNOSIS 8
Fail-Safe Function 8
ABS, EBD 8
How to Perform Trouble Diagnosis for Quick and Accurate Repair 8
INTRODUCTION 8
DIAGNOSIS FLOW CHART 9
ASKING COMPLAINTS 10
EXAMPLE OF DIAGNOSIS SHEET 10
Component Parts Location 11
Schematic 12
Wiring Diagram — ABS — 13
Control Unit Input/Output Signal Standard 17
REFERENCE VALUE FROM CONSULT-II 17
CONSULT-II Functions (ABS) 18
CONSULT-II MAIN FUNCTION 18
CONSULT-II BASIC OPERATION PROCEDURE ... 18
SELF-DIAGNOSIS 18
DATA MONITOR 20
ACTIVE TEST 21
For Fast and Accurate Diagnosis 23
PRECAUTIONS FOR DIAGNOSIS 23
Basic Inspection 23
BRAKE FLUID LEVEL, LEAKAGE AND BRAKE PAD 23
POWER SUPPLY CIRCUIT TERMINAL LOOSENESS AND BATTERY 24
INSPECTION OF ABS WARNING LAMP 24
TROUBLE DIAGNOSIS FOR SYSTEM 25
Wheel Sensor 25
INSPECTION PROCEDURE 25
ABS Actuator and Electric Unit (Control Unit) 27
INSPECTION PROCEDURE 27
ABS Actuator and Electric Unit (Control Unit) Power Supply and Ground 27
INSPECTION PROCEDURE 27
ABS Actuator Relay or ABS Motor Relay 28
INSPECTION PROCEDURE 28
G Sensor (Only AWD Models) 29
INSPECTION PROCEDURE 29
CAN Communication 31
INSPECTION PROCEDURE 31
Component Inspection 32
PARKING BRAKE SWITCH 32
BRAKE FLUID LEVEL SWITCH 32
TROUBLE DIAGNOSIS FOR SYMPTOMS 33
Excessive ABS Function Operation Frequency 33
Unexpected Pedal Reaction 33
The Stopping Distance Is Long 34
ABS Function Does Not Operate 35
Pedal Vibration or ABS Operation Sound Occurs... 35
ABS Warning Lamp Indication Is Not Normal 35
WHEEL SENSORS 36
Removal and Installation 36
COMPONENTS 36
REMOVAL 36
INSTALLATION 36
SENSOR ROTOR 37
Removal and Installation (2WD Models) 37
REMOVAL 37

INSTALLATION 37
Removal and Installation (AWD Models) 37
REMOVAL 37
INSTALLATION 37
ACTUATOR AND ELECTRIC UNIT (ASSEMBLY) 38
Removal and Installation 38
COMPONENTS 38
REMOVAL 39
INSTALLATION 39
G SENSOR 40
Removal and Installation (Only AWD Models) 40
REMOVAL 40
INSTALLATION 40

VDC/TCS/ABS

PRECAUTIONS 41
Precautions for Supplemental Restraint System (SRS) “AIR BAG” and “SEAT BELT PRE-TENSIONER” 41
Precautions for Brake System 41
Precautions for Brake Control 41
PREPARATION 42
Commercial Service Tools 42
ON-VEHICLE SERVICE 43
Adjustment of Steering Angle Sensor Neutral Position 43
SYSTEM DESCRIPTION 44
System Diagram 44
Functions 44
ABS 44
EBD 44
ABLS (ACTIVE BRAKE LSD) 44
TCS 44
VDC 45
Operation That Is Not “System Error” 45
ABS 45
TCS 45
VDC 45
Hydraulic Circuit Diagram 46
CAN Communication 46
SYSTEM DESCRIPTION 46
TROUBLE DIAGNOSIS 47
Fail-Safe Function 47
ABS, EBD, ABLS 47
VDC/TCS 47
How to Perform Trouble Diagnosis For Quick and Accurate Repair 47
INTRODUCTION 47
DIAGNOSIS FLOW CHART 48
ASKING COMPLAINTS 49
EXAMPLE OF DIAGNOSIS SHEET 49
Component Parts Location 50
Schematic 51
Wiring Diagram — VDC — 52
Control Unit Input/Output Signal Standard 58
REFERENCE VALUE FROM CONSULT-II 58
CONSULT-II Functions (ABS) 60
CONSULT-II MAIN FUNCTION 60
CONSULT-II BASIC OPERATION PROCEDURE 61
SELF-DIAGNOSIS 61
DATA MONITOR 64
ACTIVE TEST 66
For Fast and Accurate Diagnosis 68
PRECAUTIONS FOR DIAGNOSIS 68
Basic Inspection 69
BRAKE FLUID LEVEL, LEAKAGE AND BRAKE PAD 69
POWER SUPPLY CIRCUIT TERMINAL LOOSENESS AND BATTERY 69
ABS WARNING LAMP, BRAKE WARNING LAMP, VDC OFF INDICATOR LAMP, AND SLIP INDICATOR LAMP 69
TROUBLE DIAGNOSIS FOR SYSTEM 71
Wheel Sensor 71
INSPECTION PROCEDURE 71
Engine System 73
INSPECTION PROCEDURE 73
VDC/TCS/ABS Control Unit 73
INSPECTION PROCEDURE 73
Pressure Sensor 73
INSPECTION PROCEDURE 73
Steering Angle Sensor 74
INSPECTION PROCEDURE 74
Yaw Rate/Side G Sensor 76
INSPECTION PROCEDURE 76
Solenoid and VDC Switching Valve 77
INSPECTION PROCEDURE 77
Actuator Motor and Motor Relay 79
INSPECTION PROCEDURE 79
Actuator Relay 80
INSPECTION PROCEDURE 80
Stop Lamp Switch Circuit 81
INSPECTION PROCEDURE 81
VDC/TCS/ABS Control Unit Power And Ground 82
INSPECTION PROCEDURE 82
Park/Neutral Position (PNP) Switch (Only A/T Models) 83
INSPECTION PROCEDURE 83
Brake Fluid Level Switch 84
INSPECTION PROCEDURE 84
CAN Communication 85
INSPECTION PROCEDURE 85
Component Inspection 85
VDC OFF SWITCH 85
PARKING BRAKE SWITCH 86
BRAKE FLUID LEVEL SWITCH 86
MOTOR RELAY AND ACTUATOR RELAY 86
VDC ACTUATOR 87
TROUBLE DIAGNOSIS FOR SYMPTOMS 88
Excessive ABS Function Operation Frequency 88
Unexpected Pedal Reaction 88
The Stopping Distance Is Long 89
ABS Function Does Not Operate 90
Pedal Vibration or ABS Operation Sound Occurs 90
Vehicle Jerks During VDC/TCS/ABS Control 90
ABS Warning Lamp Indication Is Not Normal 91

Slip Indicator Lamp Indication Is Not Normal 91
VDC OFF Indicator Lamp Indication Is Not Normal... 92
Brake Warning Lamp Indication Is Not Normal 92
WHEEL SENSORS 93
Removal and Installation 93
COMPONENTS 93
REMOVAL 93
INSTALLATION 93
SENSOR ROTOR 94
Removal and Installation 94
REMOVAL 94
INSTALLATION 94
VDC/TCS/ABS CONTROL UNIT 95
Removal and Installation 95
REMOVAL 95
INSTALLATION 95
ACTUATOR 96
Removal and Installation 96
COMPONENTS 96
REMOVAL 97
INSTALLATION 97
G SENSOR 98
Removal and Installation 98
REMOVAL 98
INSTALLATION 98
STEERING ANGLE SENSOR 99
Removal and Installation 99
REMOVAL 99
INSTALLATION 99
VDC OFF SWITCH 100
Removal and Installation 100
REMOVAL 100
INSTALLATION 100

PRECAUTIONS

PFP:00001

Precautions for Supplemental Restraint System (SRS) “AIR BAG” and “SEAT BELT PRE-TENSIONER”

AFS002PO

The Supplemental Restraint System such as “AIR BAG” and “SEAT BELT PRE-TENSIONER”, used along with a front seat belt, helps to reduce the risk or severity of injury to the driver and front passenger for certain types of collision. Information necessary to service the system safely is included in the SRS and SB section of this Service Manual.

WARNING:

- **To avoid rendering the SRS inoperative, which could increase the risk of personal injury or death in the event of a collision which would result in air bag inflation, all maintenance must be performed by an authorized NISSAN/INFINITI dealer.**
- **Improper maintenance, including incorrect removal and installation of the SRS, can lead to personal injury caused by unintentional activation of the system. For removal of Spiral Cable and Air Bag Module, see the SRS section.**
- **Do not use electrical test equipment on any circuit related to the SRS unless instructed to in this Service Manual. SRS wiring harnesses can be identified by yellow and/or orange harnesses or harness connectors.**

Precautions for Brake System

AFS002LO

- Recommended fluid is brake fluid “DOT 3”. Refer to MA-10, "RECOMMENDED FLUIDS AND LUBRICANTS"
- Do not reuse drained brake fluid.
- Be careful not to splash brake fluid on painted areas such as body. If brake fluid is splashed, wipe it off and flush area with water immediately.
- Do not use mineral oils such as gasoline or kerosene. They will ruin rubber parts of the hydraulic system.
- Use flare nut torque wrench when removing and installing brake tube.
- Brake system is an important safety part. If a brake fluid leak is detected, always disassemble the affected part. If a malfunction is detected, replace part with a new one.
- Before working, turn ignition switch OFF and disconnect connectors of ABS actuator and electric unit (control unit) or battery cables.
- When installing brake piping, be sure to check torque.

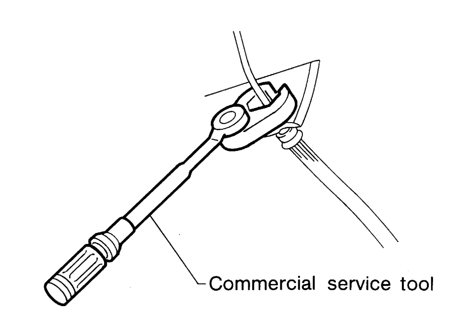

SBR686C

WARNING:

Clean brake pads and shoes with a waste cloth, then wipe with a dust collector.

Precautions for Brake Control

AFS002LP

- Just after starting vehicle after ignition switch ON, brake pedal may vibrate or motor operating noise may be heard from engine room. This is a normal status of operation check.
- When an error is indicated by ABS or another warning lamp, collect all necessary information from customer (what symptoms are present under what conditions) and check for simple causes before starting diagnostic servicing. Besides electrical system inspection, check brake booster operation, brake fluid level, and fluid leaks.
- If tire size and type are used in an improper combination, or brake pads are not Genuine NISSAN parts, stopping distance or steering stability may deteriorate.
- If there is a radio, antenna, or antenna lead-in wire (including wiring) near control module, ABS function may have a malfunction or error.
- If aftermarket parts (car stereo, CD player, etc.) have been installed, check for incidents such as harness pinches, open circuits, and improper wiring.

PREPARATION

PFP:00002

Commercial Service Tools

AFS002PB

Tool name		Description
1.Flare nut crowfoot a: 10 mm (0.39 in) 2.Torque wrench	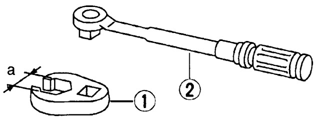 S-NT360	Removing and installing each brake piping

SYSTEM DESCRIPTION

PFP:00000

System Diagram

AFS002LR

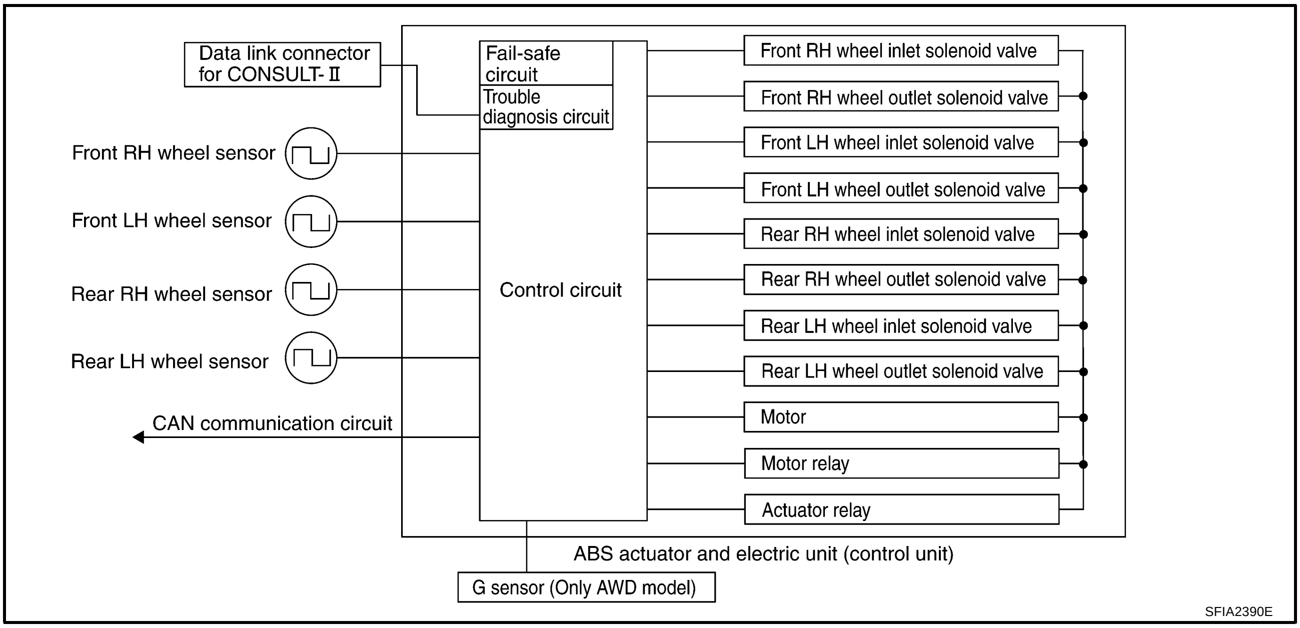

Functions

AFS002P6

ABS

- The Anti-Lock Brake System is a function that detects wheel revolution while braking, and it improves handling stability during sudden braking by electrically preventing 4 wheel lock. Maneuverability is also improved for avoiding obstacles.
- Electrical System Diagnosis by CONSULT-II is available.

EBD

- Electronic Brake Distribution is a function that detects subtle slippages between front and rear wheels during braking, and it improves handling stability by electronically controlling Brake Fluid Pressure which results in reduced rear wheel slippage.
- Electrical System Diagnosis by CONSULT-II is available.

Operation That Is Not “System Error”

AFS002P7

ABS

- When starting engine or just after starting vehicle, brake pedal may vibrate or the motor operating noise may be heard from engine room. This is a normal states of the operation check.
- During ABS operation, brake pedal lightly vibrates and a mechanical noise may be heard. This is normal.
- Stopping distance may be longer than that of vehicles without ABS when vehicle drives on rough, gravel, or snow-covered (fresh, deep snow) roads.

Hydraulic Circuit Diagram

AFS002LV

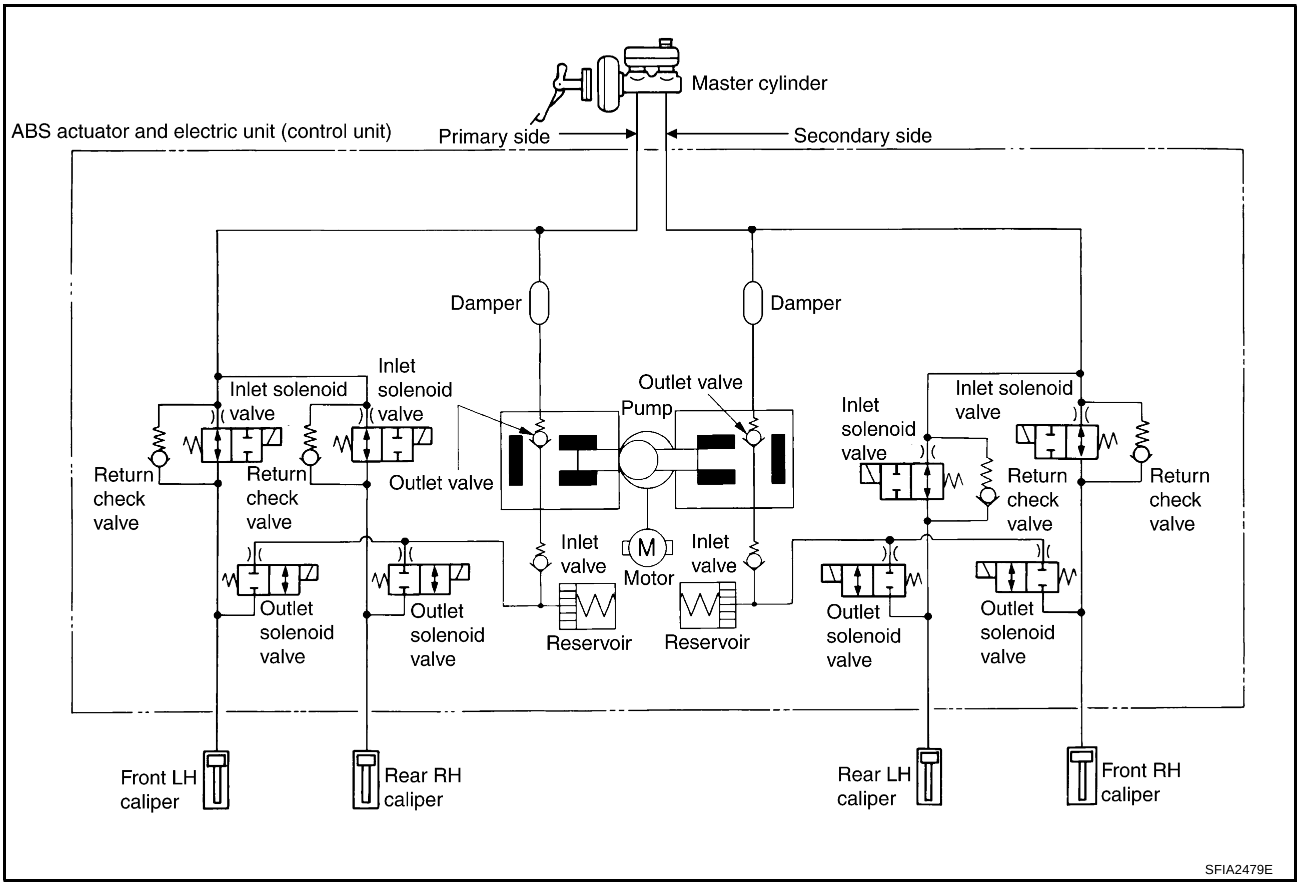

CAN Communication

AFS0035N

SYSTEM DESCRIPTION

CAN (Controller Area Network) is a serial communication line for real time application. It is an on-vehicle multiplex communication line with high data communication speed and excellent error detection ability. Many electronic control units are equipped onto a vehicle, and each control unit shares information and links with other control units during operation (not independent). In CAN communication, control units are connected with 2 communication lines (CAN H line, CAN L line) allowing a high rate of information transmission with less wiring. Each control unit transmits/receives data but selectively reads required data only.

For details, refer to LAN-21, "CAN Communication Unit" .

TROUBLE DIAGNOSIS

PFP:00004

Fail-Safe Function

AFS0038H

ABS, EBD

In case of electrical malfunction with ABS, ABS warning lamp will turn on. In case of electrical incident with EBD, ABS warning lamp will turn on. Simultaneously, ABS become one of following conditions of Fail-Safe function.

1. For ABS malfunction, only EBD is activated and condition of vehicle is same condition of vehicles without ABS function.

   NOTE:
   In step 1 shown above, self-diagnosis when ignition switch is turned ON and when vehicle starts at initial time is performed. ABS self-diagnosis noise may be heard as usual.
2. For EBD malfunction, EBD and ABS become inoperative, and condition of vehicle is same as condition of vehicles without ABS, EBD function.

How to Perform Trouble Diagnosis for Quick and Accurate Repair

AFS002LX

INTRODUCTION

- To perform trouble diagnosis, it is the most important to have understanding about vehicle systems (control and mechanism) thoroughly.
- It is also important to clarify customer complaints before inspection.
  First of all, reproduce symptom, and understand it fully.
  Ask customer about his/her complaints carefully. In some cases, it will be necessary to check symptom by driving vehicle with customer.

  NOTE:
  Customers are not professionals. Do not assume "maybe customer means..." or "maybe customer mentioned this symptom".

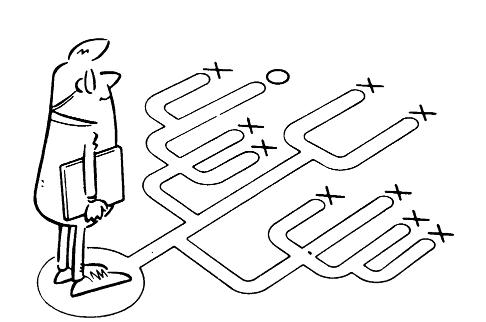

EFJ0028D

- It is essential to check symptoms right from beginning in order to repair a malfunction completely.
  For an intermittent malfunction, it is important to reproduce symptom based on interview with customer and past examples. Do not perform inspection on ad hoc basis. Most intermittent malfunctions are caused by poor contacts. In this case, it will be effective to shake suspected harness or connector by hand. When repairs are performed without any symptom check, no one can judge if malfunction has actually been eliminated.
- After diagnosis, make sure to perform "erase memory". Refer to BRC-19, "ERASE MEMORY" .
- For an intermittent malfunction, move harness or harness connector by hand to check poor contact or false open circuit.
- Always read "GI section" to confirm general precautions. Refer to GI-4, "General Precautions" .

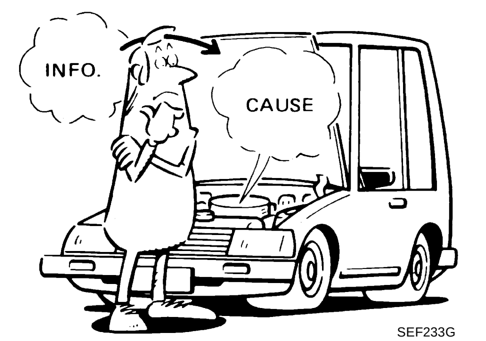

SEF233G

DIAGNOSIS FLOW CHART

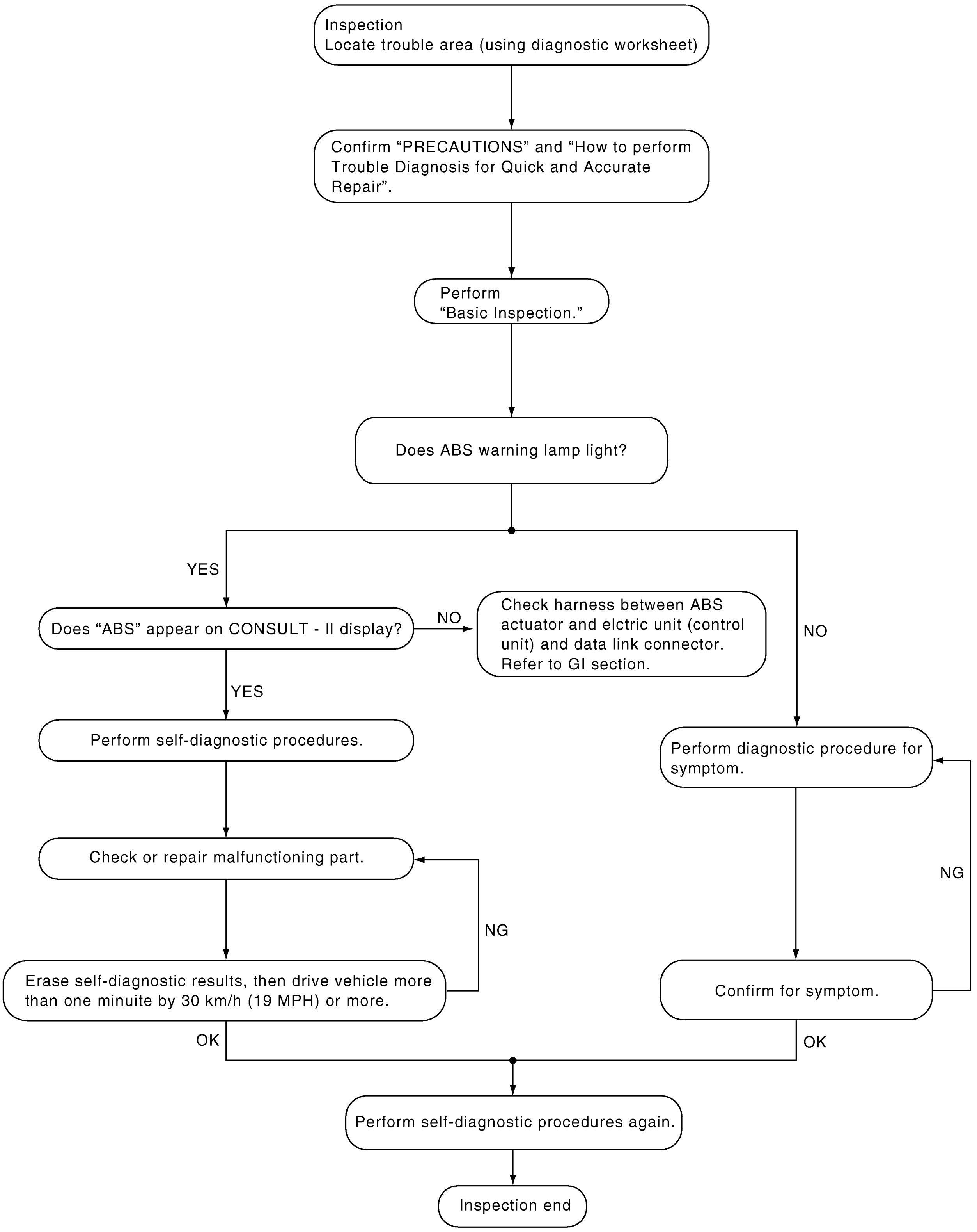

PFIA0701E

ASKING COMPLAINTS

- Complaints vary depending on the person. It is important to clarify the customer's actual remarks.
- Ask the customer about what symptoms are present and under what conditions. Use the information to reproduce the symptom while driving.
- It is also important to use diagnosis sheet so as not to miss vital information.

KEY POINTS

WHAT ..... Vehicle model
WHEN ..... Date, Frequencies
WHERE ..... Road conditions
HOW ..... Operating conditions, Weather conditions, Symptoms

SBR339B

EXAMPLE OF DIAGNOSIS SHEET

Customer name MR/MS	Model & Year		VIN
Engine #	Trans.		Mileage
Incident Date	Manuf. Date		In Service Date
Symptoms	☐ Noise and vibration (from engine compartment) ☐ Noise and vibration (from axle)	☐ Warning / Indicator activate	☐ Firm pedal operation Large stroke pedal operation
	☐ ABS does not work (Wheels lock when braking)	☐ ABS does not work (wheels slip when braking)	☐ Lack of sense of acceleration
Engine conditions	☐ When starting ☐ After starting		
Road conditions	☐ Low friction road (☐Snow ☐Gravel ☐Other) ☐ Bumps / potholes		
Driving conditions	☐ Full-acceleration ☐ High speed cornering ☐ Vehicle speed: Greater than 10 km/h (6 MPH) ☐ Vehicle speed: 10 km/h (6 MPH) or less ☐ Vehicle is stopped		
Applying brake conditions	☐ Suddenly ☐ Gradually		
Other conditions	☐ Operation of electrical equipment ☐ Shift change ☐ Other descriptions		

LFIA0176E

Component Parts Location

AFS002LY

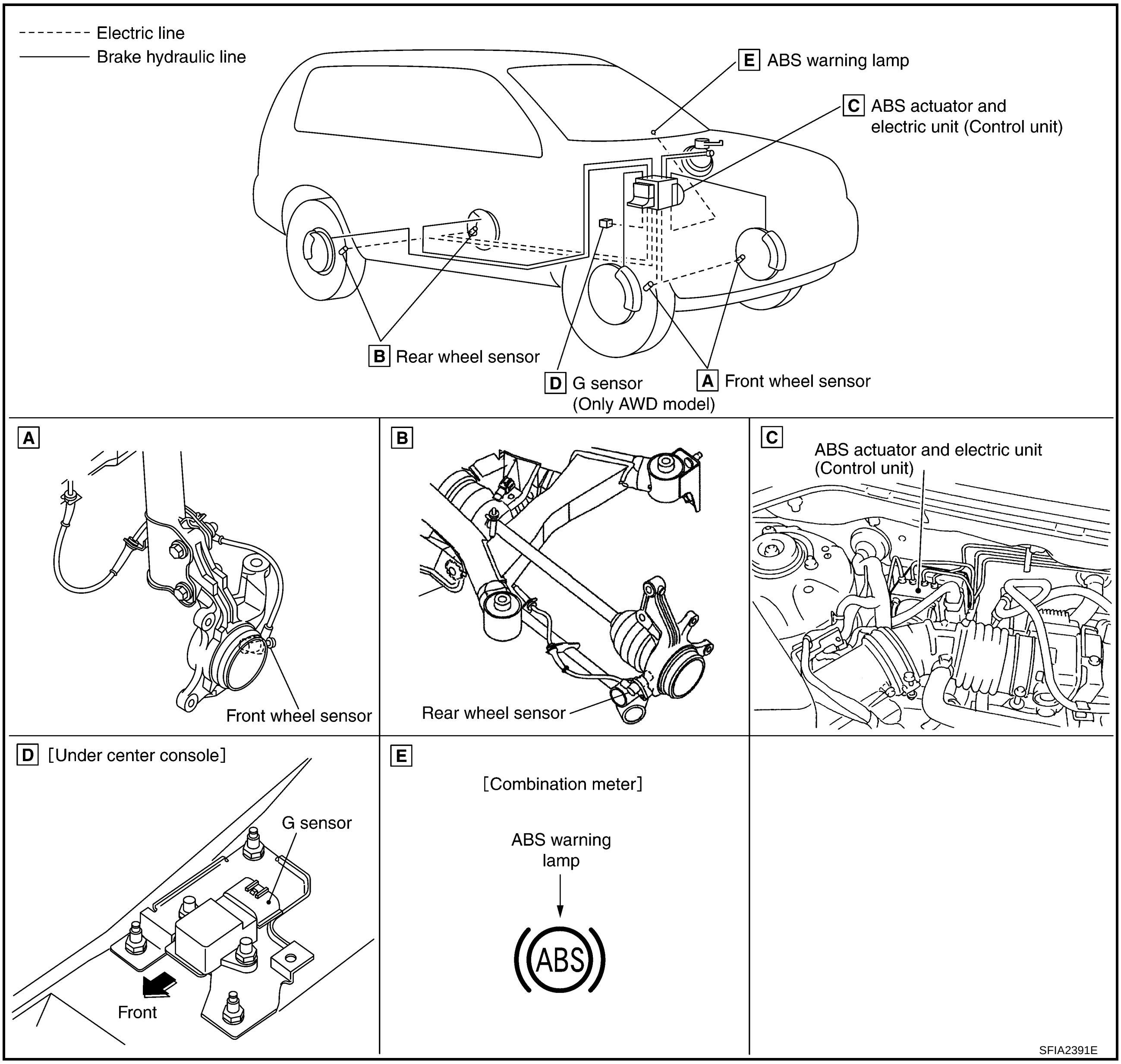

Schematic

AFS002LZ

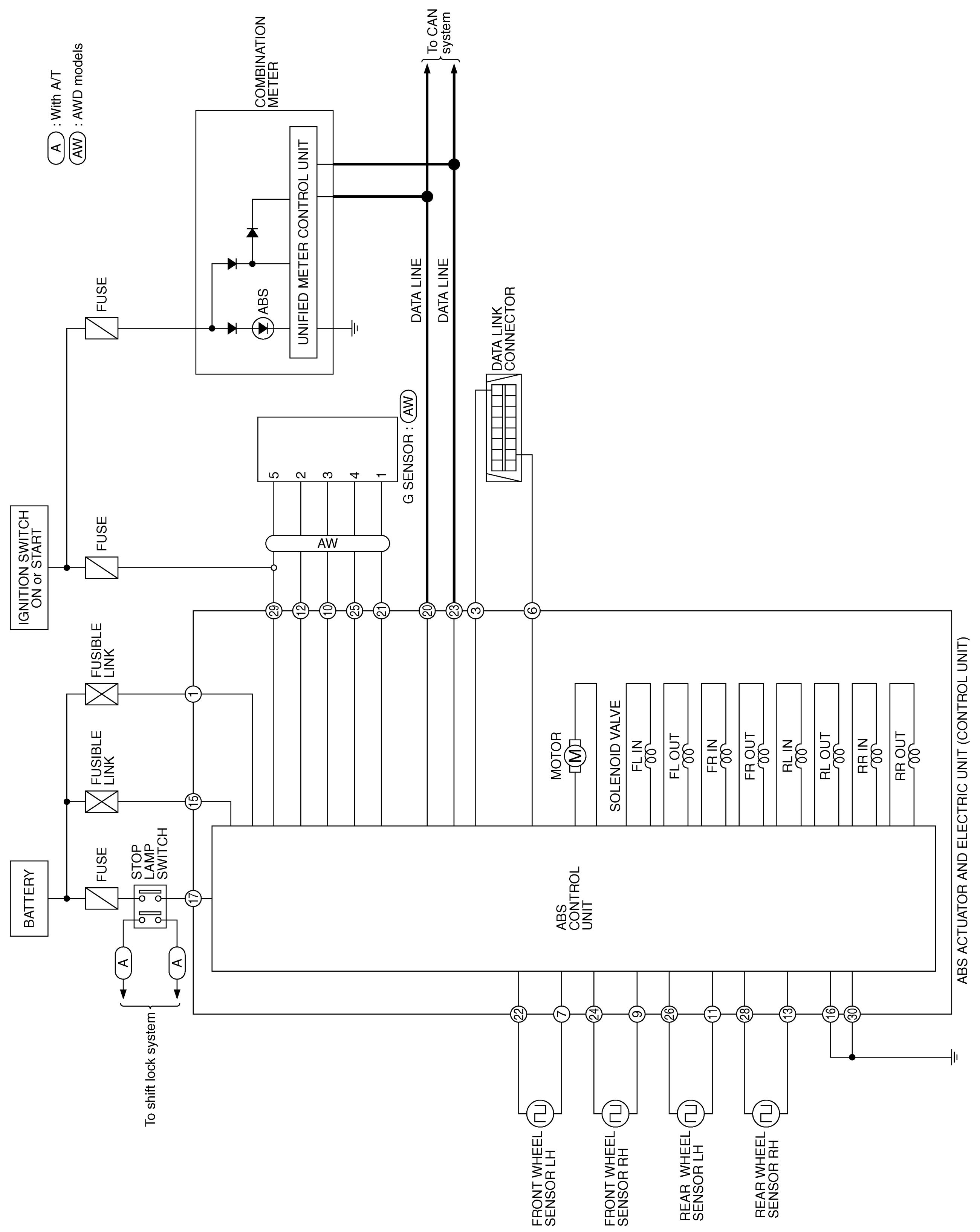

TFWB0019E

Wiring Diagram — ABS —

AFS002M0

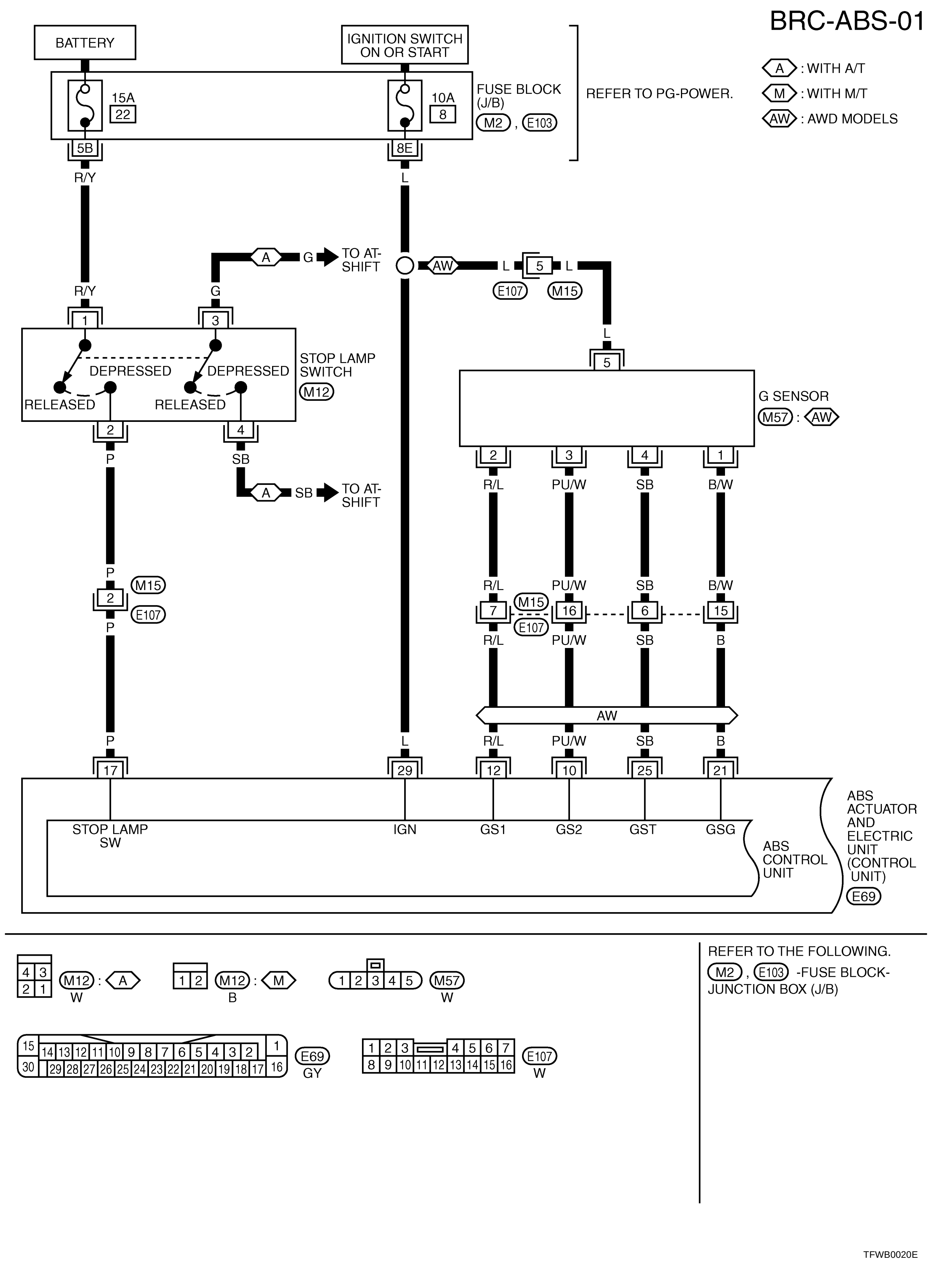

BRC-ABS-02

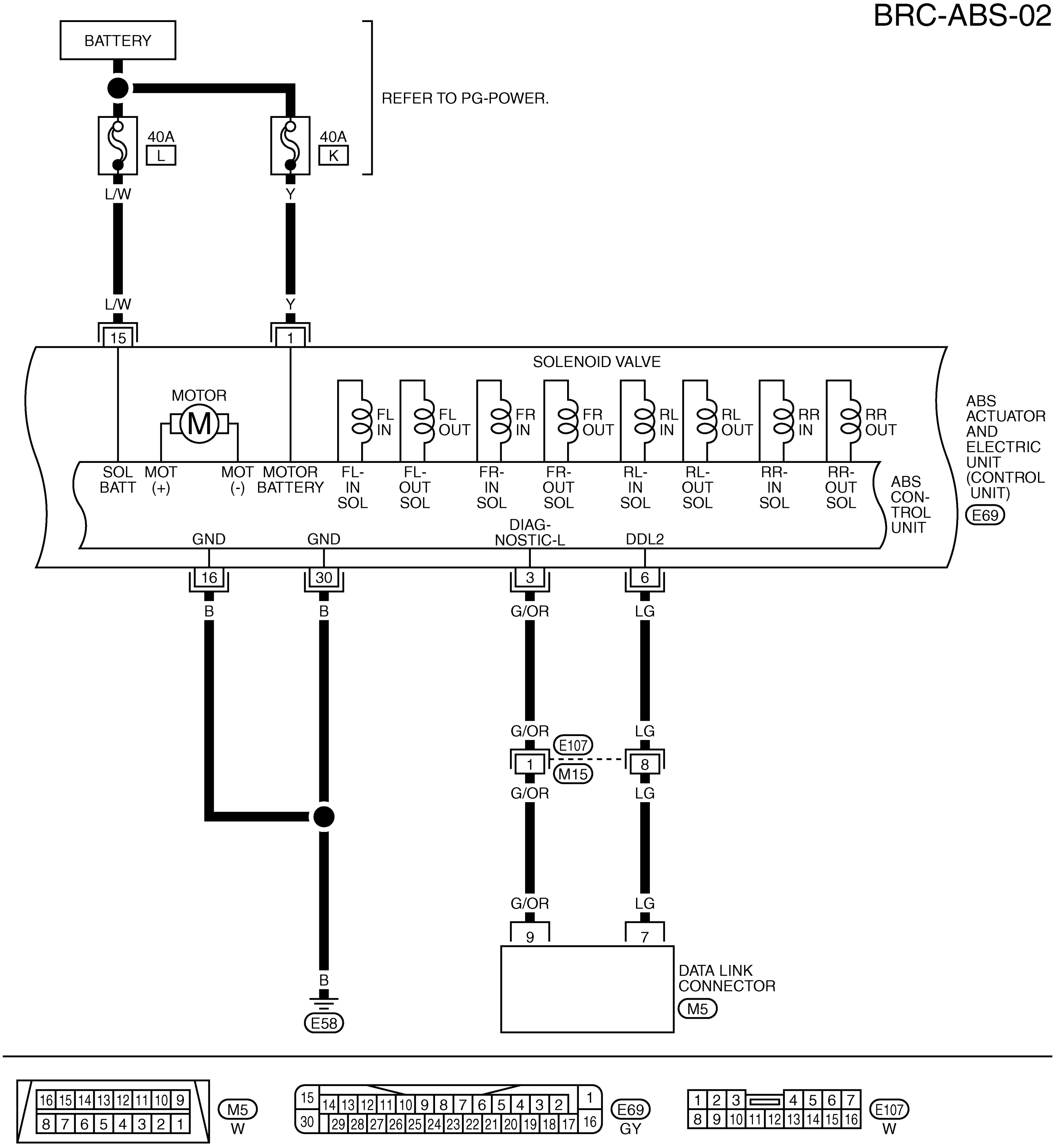

TFWB0003E

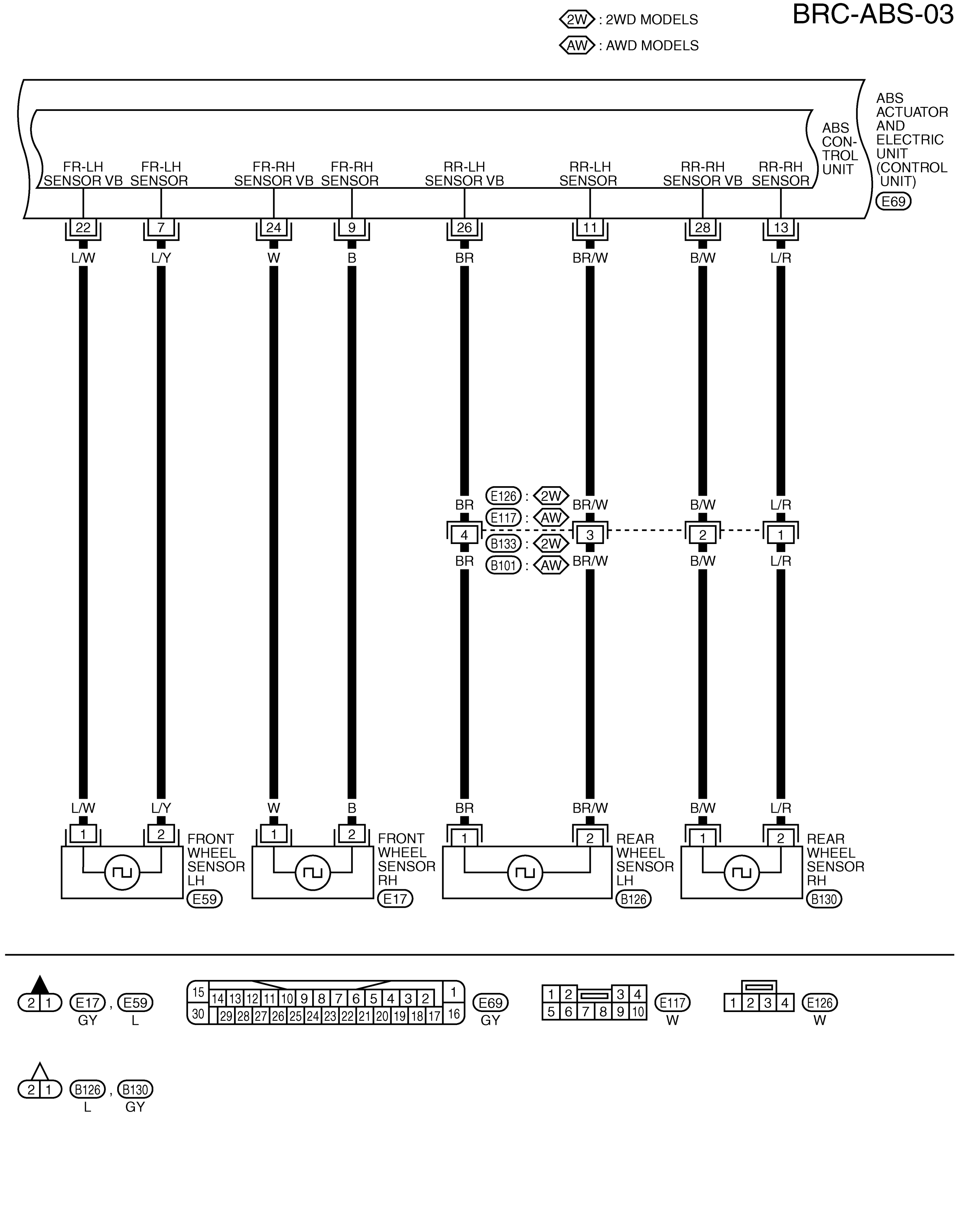
BRC-ABS-03
2W : 2WD MODELS
AW : AWD MODELS
ABS ACTUATOR AND ELECTRIC UNIT (CONTROL UNIT)
E69
ABS CON-TROL UNIT
FR-LH SENSOR VB
FR-LH SENSOR
FR-RH SENSOR VB
FR-RH SENSOR
RR-LH SENSOR VB
RR-LH SENSOR
RR-RH SENSOR VB
RR-RH SENSOR
22 7 24 9 26 11 28 13
L/W L/Y W B BR BR/W B/W L/R
E126 : 2W
E117 : AW
B133 : 2W
B101 : AW
4 3 2 1
FRONT WHEEL SENSOR LH
E59
FRONT WHEEL SENSOR RH
E17
REAR WHEEL SENSOR LH
B126
REAR WHEEL SENSOR RH
B130
E17 , E59
GY L
E69
GY
E117
W
E126
W
B126 , B130
L GY
TFWB0021E

BRC-ABS-04

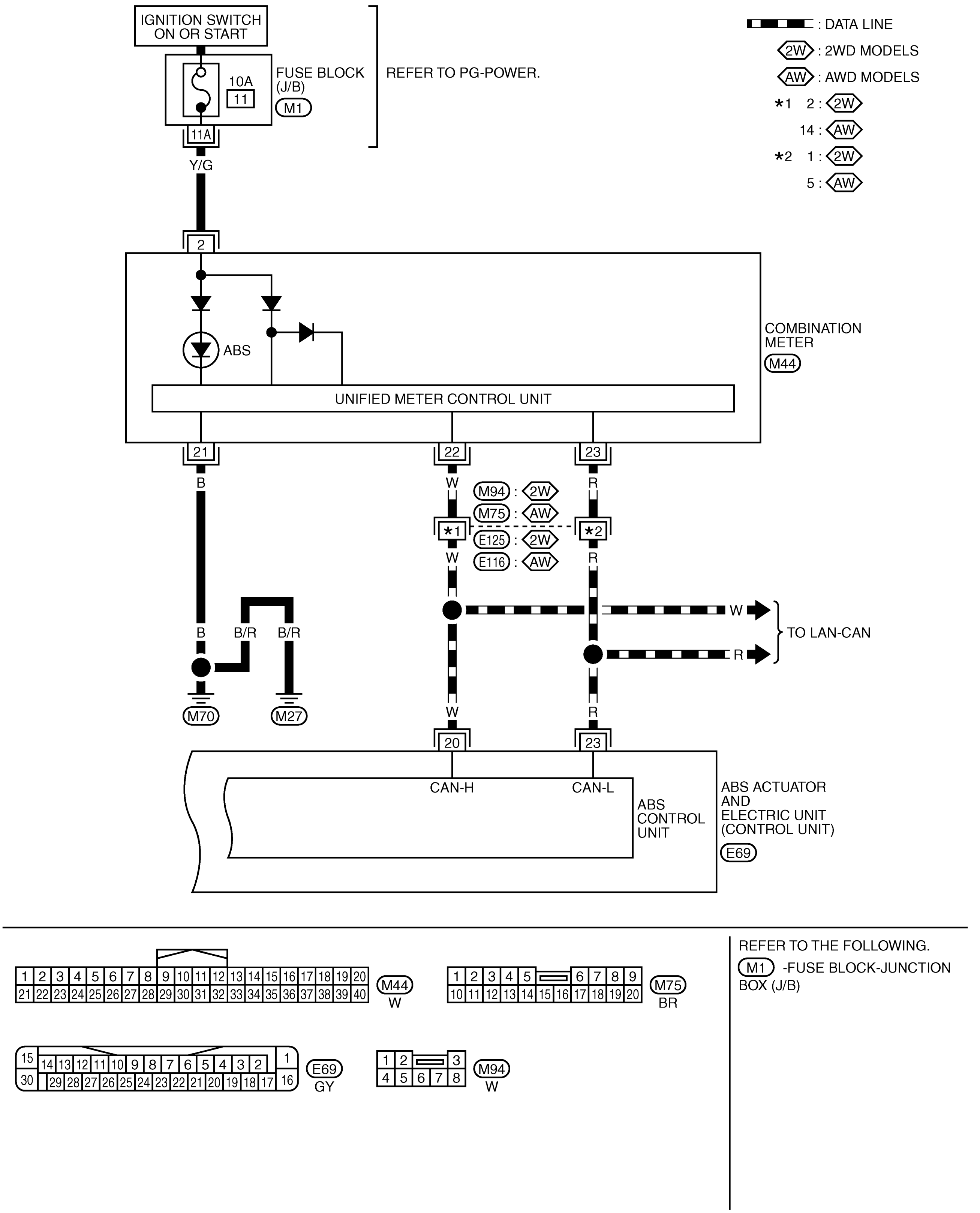

TFWB0022E

Control Unit Input/Output Signal Standard

AFS002M1

REFERENCE VALUE FROM CONSULT-II

CAUTION:

The display shows the control unit calculation data, so a normal value might be displayed even in the event the output circuit (harness) is open or short - circulated.

Data monitor item	Display item	Data monitor		Reference: Inspection item
		Condition	Reference values in normal operation	
FR LH SENSOR FR RH SENSOR RR LH SENSOR RR RH SENSOR	Wheel speed calculated using signals from all four wheel sensors	Vehicle stopped	0 [km/h]	BRC-25, "Wheel Sensor"
		Vehicle running (Note 1)	Nearly matches the speedometer display (± 10 % or less)	
DECEL G-SEN 1 DECEL G-SEN 2	Fore-and-aft gravity detected by G sensor	When vehicle is stopped on level ground	OFF	BRC-29, "G Sensor (Only AWD Models)"
		When G sensor is tilted toward the front with G sensor mounting nuts removed	ON	
ABS IN SOL ABS OUT SOL	Operation status of all solenoid valve	When the actuator solenoid operates or during a fail-safe	ON	BRC-28, "ABS Actuator Relay or ABS Motor Relay"
		When the actuator relay operates and the actuator solenoid does not operate	OFF	
STOP LAMP SW	Brake pedal operation status	Brake pedal depressed	ON	Stop lamp switch circuit
		Brake pedal not depressed	OFF	
MOTOR RELAY	Motor and motor relay operation status	When the motor relay and motor are operating	ON	BRC-28, "ABS Actuator Relay or ABS Motor Relay"
		When the motor relay and motor are not operating	OFF	
ACTUATOR RELAY	Actuator relay operation status	When the actuator relay is operating	OFF	
		When the actuator relay is not operating	ON	
ABS WARN LAMP	ABS warning lamp on condition (Note 2)	When ABS warning lamp is ON	ON	BRC-24, "INSPECTION OF ABS WARNING LAMP"
		When ABS warning lamp is OFF	OFF	
BATTERY VOLT	Battery voltage supplied to ABS actuator and electric unit (control unit)	Ignition switch ON	10 - 16 V	BRC-27, "ABS Actuator and Electric Unit (Control Unit) Power Supply and Ground"
EBD SIGNAL ABS SIGNAL	EBD operation ABS operation	EBD active ABS active	ON	EBD system ABS system
		EBD not active ABS not active	OFF	
EBD FAIL SIG ABS FAIL SIG	System fail signal status	EBD Fail ABS Fail	ON	
		EBD normal ABS normal	OFF	

Note 1: Confirm tire pressure is the standard value.
Note 2: ABS warning lamp ON/OFF timing.
ON: When the ignition switch is turned ON or when an error is detected.
OFF: After the ignition switch is turned ON (when system is normal).

CONSULT-II Functions (ABS)
AFS002M2

CONSULT-II MAIN FUNCTION

CONSULT-II can display each diagnostic item using the diagnostic test modes shown following.

Diagnostic test mode	Function	Reference
SELF-DIAG-NOSTIC RESULTS	Self-diagnostic results can be read and erased quickly.	BRC-18, "Self-Diagnosis"
DATA MONI-TOR	Input/Output data in the ABS actuator and electric unit (control unit) can be read.	BRC-20, "Data Monitor"
CAN DIAG SUPPORT MNTR	The result of transmit/receive diagnostic of CAN communication can be read.	LAN-13, "CAN Diagnostic Support Monitor"
ACTIVE TEST	Diagnostic Test Mode in which CONSULT-II drives some actuators apart from the ABS actuator and electric unit (control unit) and also shifts some parameters in a specified range.	BRC-21, "Active Test"
FUNCTION TEST	This mode is used to inform customers when their vehicle condition requires periodic maintenance.	Separate volume "CONSULT-II OPERATION MANUAL (FUNCTION TEST)"
ECU PART NUMBER	ABS actuator and electric unit (control unit) part number can be read.	—

CONSULT-II BASIC OPERATION PROCEDURE

1. Touch "ABS" in the "SELECT SYSTEM" screen.

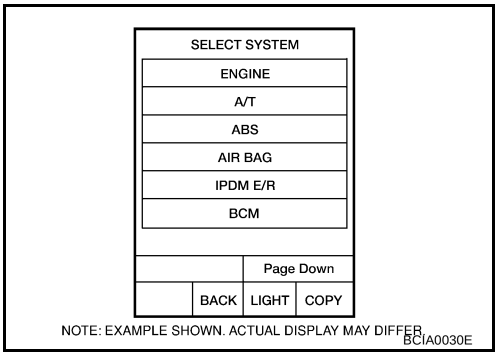

2. Select the required diagnostic location from the "SELECT DIAG MODE" screen.

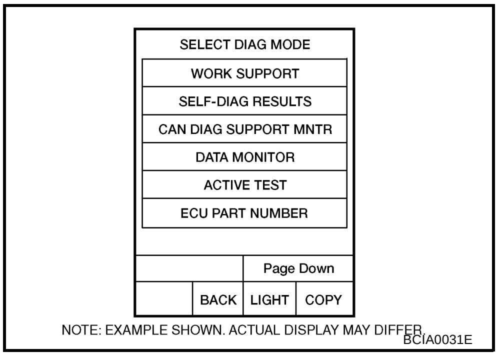

SELF-DIAGNOSIS

OPERATION PROCEDURE

1. Turn ignition switch OFF.
2. Connect CONSULT-II and CONSULT-II CONVERTER to data link connector.
3. Turn ignition switch ON.
4. Start engine and drive vehicle at 30 km/h (19 MPH) or more for approximately 1 minute.
5. After stopping vehicle, with the engine running, touch "START (NISSAN BASED VHCL)", "ABS", "SELF-DIAG RESULTS" in order on the CONSULT-II screen.
   If "ABS" is not indicated, go to GI-38, "CONSULT-II Data Link Connector (DLC) Circuit" .

6. The self-diagnostic results are displayed. (Touch “PRINT” to print out self-diagnostic results, if necessary.)
   - Check ABS warning lamp if “NO FAILURE” is displayed.
7. Perform the appropriate inspection from the display item list, and repair or replace the malfunctioning component. Refer to BRC-19, "DISPLAY ITEM LIST" .
8. Start engine and drive vehicle at 30 km/h (19 MPH) or more for approximately 1 minute.

   CAUTION:

   When the wheel sensor malfunctions, after inspecting the wheel sensor system, the ABS warning lamp will not turn off even when the system is normal unless the vehicle is driving at approximately 30 km/h (19 MPH) or more for approximately 1 minute.

ERASE MEMORY

1. Turn ignition switch OFF.
2. Start engine and touch “START (NISSAN BASED VHCL)”, “ABS”, “SELF-DIAG RESULTS”, “ERASE MEMORY” in order on the CONSULT-II screen to erase the error memory.

   CAUTION:

   If the error memory is not erased, re-perform the operation from step 4.
3. Perform self-diagnosis again, and make sure that diagnostic memory is erased.
4. Drive vehicle at 30 km/h (19 MPH) or more for approximately 1 minute as the final inspection, and make sure that the ABS warning lamp is turned off.

DISPLAY ITEM LIST

Diagnostic item	Malfunction is detected when...	Check circuit
FR LH SENSOR – 1	Circuit of front LH wheel sensor is open.	BRC-25, "Wheel Sensor" (Note 1)
RR RH SENSOR – 1	Circuit of rear RH wheel sensor is open.	
FR RH SENSOR – 1	Circuit of front RH wheel sensor is open.	
RR LH SENSOR – 1	Circuit of rear LH wheel sensor is open.	
FR LH SENSOR – 2	When the circuit in the front LH wheel sensor is short-circuited. Or when the sensor power voltage is outside the standard. When the distance between the wheel sensor and sensor rotor is too large and the sensor pulse cannot be recognized by the control unit.	
RR RH SENSOR – 2	When the circuit in the rear RH wheel sensor is short-circuited. Or when the sensor power voltage is outside the standard. When the distance between the wheel sensor and sensor rotor is too large and the sensor pulse cannot be recognized by the control unit.	
FR RH SENSOR – 2	When the circuit in the front RH wheel sensor is short-circuited. Or when the sensor power voltage is outside the standard. When the distance between the wheel sensor and sensor rotor is too large and the sensor pulse cannot be recognized by the control unit.	
RR LH SENSOR – 2	When the circuit in the rear LH wheel sensor is short-circuited. Or when the sensor power voltage is outside the standard. When the distance between the wheel sensor and sensor rotor is too large and the sensor pulse cannot be recognized by the control unit.	
MAIN RELAY	When the control unit detects an error in the actuator relay circuit.	BRC-28, "ABS Actuator Relay or ABS Motor Relay"

Diagnostic item	Malfunction is detected when...	Check circuit
FR LH IN ABS SOL	When the control unit detects an error in the front left inlet solenoid circuit.	BRC-28, "ABS Actuator Relay or ABS Motor Relay"
FR LH OUT ABS SOL	When the control unit detects an error in the front left outlet solenoid circuit.	
RR RH IN ABS SOL	When the control unit detects an error in the rear right inlet solenoid circuit.	
RR RH OUT ABS SOL	When the control unit detects an error in the rear right outlet solenoid circuit.	
FR RH IN ABS SOL	When the control unit detects an error in the front right inlet solenoid circuit.	
FR RH OUT ABS SOL	When the control unit detects an error in the front right outlet solenoid circuit.	
RR LH IN ABS SOL	When the control unit detects an error in the rear left inlet solenoid circuit.	
RR LH OUT ABS SOL	When the control unit detects an error in the rear left outlet solenoid circuit.	
LOW POWER VOLTAGE	When the ABS actuator and electric unit (control unit) power voltage is lower than normal.	BRC-27, "ABS Actuator and Electric Unit (Control Unit) Power Supply and Ground"
ABS CONTROLLER	When there is an internal error in the ABS actuator and electric unit (control unit).	BRC-27, "ABS Actuator and Electric Unit (Control Unit)"
CAN COMM CIRCUIT	When there is an error in the CAN communication circuit.	BRC-31, "CAN Communication" (Note 2)
PUMP MOTOR	During actuator motor operation with ON, when actuator motor turns OFF or when control line for actuator motor relay is open.	BRC-28, "ABS Actuator Relay or ABS Motor Relay"
G SENSOR (Only AWD model)	G sensor is malfunctioning, or signal line of G sensor is open or shorted.	BRC-29, "G Sensor (Only AWD Models)"

Note 1: After completing repairs of shorted sensor circuit, when ignition switch is turned ON, ABS warning lamp turns on. Make sure that ABS warning lamp turns off while driving vehicle at 30 km/h (19 MPH) or more for approximately 1 minute according to self-diagnosis procedure. In addition, if wheel sensor 2 is displayed for wheels, check wheel sensor circuit and also check control unit power voltage.
Note 2: When errors are detected in several systems, including CAN communication circuit [U1000], troubleshoot CAN communication circuit. Refer to LAN-16, "CAN COMMUNICATION" .

DATA MONITOR

OPERATION PROCEDURE

1. Touch “START (NISSAN BASED VHCL)”, “ABS”, “DATA MONITOR” in order on the CONSULT-II screen. If “ABS” is not indicated, go to GI-38, "CONSULT-II Data Link Connector (DLC) Circuit" .
2. At the monitor item selection screen, touch one of the items “ECU INPUT SIGNALS”, “MAIN SIGNALS” or. “SELECTION FROM MENU”.
3. Touch “START” to proceed to the data monitor screen.

DISPLAY ITEM LIST

×: Standard –: Not applicable

Data monitor item (Unit)	SELECT MONITOR ITEM			Remarks
	ECU INPUT SIGNALS	MAIN SIGNALS	SELECTION FROM MENU	
FR LH SENSOR [km/h]	×	×	×	Wheel speed calculated by front LH wheel sensor signal is displayed.
FR RH SENSOR [km/h]	×	×	×	Wheel speed calculated by front RH wheel sensor signal is displayed.

Data monitor item (Unit)	SELECT MONITOR ITEM			Remarks
	ECU INPUT SIGNALS	MAIN SIGNALS	SELECTION FROM MENU	
RR LH SENSOR [km/h]	×	×	×	Wheel speed calculated by rear LH wheel sensor signal is displayed.
RR RH SENSOR [km/h]	×	×	×	Wheel speed calculated by rear RH wheel sensor signal is displayed.
DECEL G-SEN 1 (ON/OFF) (Only AWD model)	×	×	×	G sensor 1 (ON/OFF) status is displayed.
DECEL G-SEN 2 (ON/OFF) (Only AWD model)	×	×	×	G sensor 2 (ON/OFF) status is displayed.
FR LH IN SOL (ON/OFF)	–	×	×	Front left inlet ABS solenoid valve (ON/OFF) status is displayed.
FR LH OUT SOL (ON/OFF)	–	×	×	Front left outlet ABS solenoid valve (ON/OFF) status is displayed.
RR RH IN SOL (ON/OFF)	–	×	×	Rear right inlet ABS solenoid valve (ON/OFF) status is displayed.
RR RH OUT SOL (ON/OFF)	–	×	×	Rear right outlet ABS solenoid valve (ON/OFF) status is displayed.
FR RH IN SOL (ON/OFF)	–	×	×	Front right inlet ABS solenoid valve (ON/OFF) status is displayed.
FR RH OUT SOL (ON/OFF)	–	×	×	Front right outlet ABS solenoid valve (ON/OFF) status is displayed.
RR LH IN SOL (ON/OFF)	–	×	×	Rear left inlet ABS solenoid valve (ON/OFF) status is displayed.
RR LH OUT SOL (ON/OFF)	–	×	×	Rear left outlet ABS solenoid valve (ON/OFF) status is displayed.
STOP LAMP SW (ON/OFF)	×	×	×	Stop lamp switch (ON/OFF) status is displayed.
MOTOR RELAY (ON/OFF)	–	×	×	ABS motor relay (ON/OFF) condition is displayed.
ACTUATOR RLY (ON/OFF)	–	×	×	ABS actuator relay (ON/OFF) status is displayed.
ABS WARN LAMP (ON/OFF)	–	×	×	ABS warning lamp (ON/OFF) status is displayed.
BATTERY VOLT (V)	×	×	×	The voltage supplied to the ABS actuator and electric unit (control unit) is displayed.
EBD SIGNAL (ON/OFF)	–	–	×	EBD operation (ON/OFF) status is displayed.
ABS SIGNAL (ON/OFF)	–	–	×	ABS operation (ON/OFF) status is displayed.
EBD FAIL SIG (ON/OFF)	–	–	×	EBD fail-safe signal (ON/OFF) status is displayed.
ABS FAIL SIG (ON/OFF)	–	–	×	ABS fail-safe signal (ON/OFF) status is displayed.

ACTIVE TEST

CAUTION:

- **Do not perform ACTIVE TEST while driving vehicle.**
- **Make sure to completely bleed air from the brake system.**
- **Active test cannot be performed when ABS or EBD operation is malfunction.**

OPERATION PROCEDURE

1. Connect CONSULT-II and CONVERTER to data link connector and start engine.
2. Touch “START (NISSAN BASED VHCL)”, “ABS”, “ACTIVE TEST” in order on the CONSULT-II screen. If “ABS” is not indicated, go to GI-38, "CONSULT-II Data Link Connector (DLC) Circuit" .
3. The “ SELECT TEST ITEM” screen is displayed.
4. Touch necessary test item.

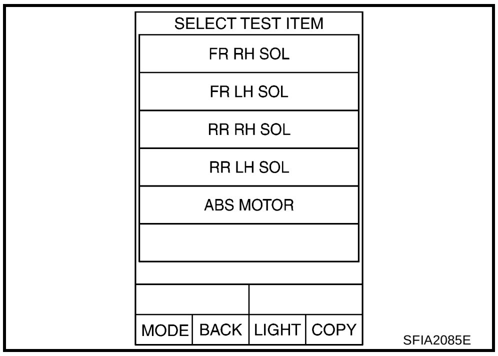

SFIA2085E

5. Touch “START” with “MAIN SIGNALS” line inverted.
6. ACTIVE TEST screen will be displayed, so perform the following test.
   - Solenoid valve
   - ABS motor

   NOTE:
   - When active test is performed while depressing pedal, pedal depression amount will change, but this is normal.
   - Approximately 10 seconds after operation has begun, “TEST STOP” will be displayed.
   - To perform a retest after “TEST STOP” is displayed, touch “BACK” and perform test from step 3.

SOLENOID VALVE

NOTE:

The example shown is for the front right wheel. The procedure for the other wheels is the same as given below.

1. For ABS solenoid valve, touch “UP”, “KEEP”, and “DOWN”. Then use screen monitor to make sure solenoid valve operates as shown in Solenoid Valve Operation Chart.

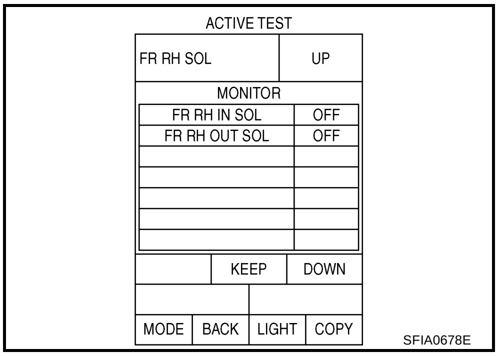

SFIA0678E

Solenoid Valve Operation Chart

Operation	ABS solenoid valve		
	UP	KEEP	DOWN
FR RH IN SOL	OFF	ON	ON
FR RH OUT SOL	OFF	OFF	ON*

*: ON for 1 to 2 seconds after the touch, and then OFF

ABS MONITOR

Touch “ON”, “OFF” of the display screen, and make sure if ABS motor relay and ABS actuator relay are operating as given in the following table.

Operation	ON	OFF
MOTOR RELAY	ON	OFF
ACTUATOR RLY	ON	ON

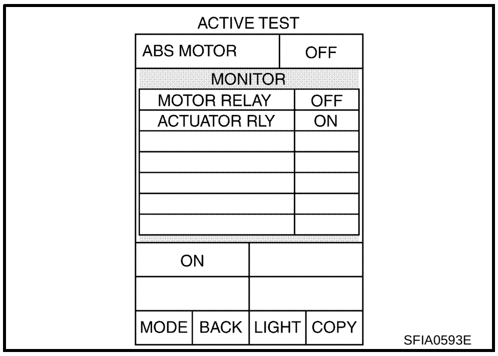

For Fast and Accurate Diagnosis

AFS002M4

PRECAUTIONS FOR DIAGNOSIS

- Be sure to check the procedures of “How to Perform Trouble Diagnosis” in advance. Refer to GI-4, "General Precautions" .
- Always erase memory after completing trouble diagnosis. Refer to BRC-19, "ERASE MEMORY" .
- When checking continuity and voltage between units, be sure to check for disconnection, looseness, bend, or collapse for connector terminals. Repair or replace applicable part if any non-standard condition is detected.
- Intermittent malfunctions may be caused by a poor connection in the harness, connectors, and terminals. Move harnesses, harness connectors, and terminals by hand to make sure all connections are solid and undamaged.
- Do not to forcibly extend any connector terminal if a circuit tester is used for the check.
- The symptom shown in the table below may occur, but the system is operating normally.

Symptom	Symptom description	Result
Motor operation noise	This is the operation noise of the motor in the actuator, and there may be a slight sound during ABS operation.	Normal
	Just after the engine starts, the motor operating noise may be heard. This is a normal status of the system operation check.	
System operation check noise	When engine starts, “click” noise may be heard from engine room. This is normal status of system operation check.	Normal
ABS operation (Longer stopping distance)	When driving on roads with a low coefficient of friction, such as snowy roads or gravel roads, the stopping distance is sometimes longer for vehicles equipped with ABS. Therefore, when driving on such roads, drive at a sufficiently reduced speed to be safe.	Normal

ON and OFF Timing for ABS Warning Lamp

×: ON —: OFF

Condition	ABS warning lamp
Ignition switch OFF	–
When ignition switch is turned ON	×
After ignition switch is turned ON (When system is normal)	–
ABS error	×
EBD error	×

Basic Inspection

AFS002M5

BRAKE FLUID LEVEL, LEAKAGE AND BRAKE PAD

1. Check fluid level in the brake fluid reservoir tank. Refill the brake fluid if fluid level is low.
2. Check the area around the brake piping and ABS actuator and electric unit (control unit) for leakage. If leakage or oozing is detected, check as follows:
   - If ABS actuator and electric unit (control unit) connections are loose, tighten piping to the specified torque. Check again for leakage, and make sure that there is no fluid leakage.

- If the flare nuts at the connections and the threads of the actuator are damaged, replace the damaged parts. Then check again for leakage, and make sure that there is no fluid leakage.
- If leakage or oozing is detected on parts other than actuator connections, wipe with a clean cloth and check again. If there is still leakage or oozing, replace the damaged part.
- If leakage or oozing is detected on actuator body, wipe with a clean cloth and check again. If there is still leakage or oozing, replace ABS actuator and electric unit (control unit).

  CAUTION:
  ABS actuator and electric unit (control unit) cannot be disassembled.

3. Check brake disc rotor and pads. Front disc rotor: BR-30, "DISC ROTOR INSPECTION" , Front pad: BR-25, "PAD WEAR INSPECTION" , Rear disk rotor: BR-35, "DISC ROTOR INSPECTION" , Rear pad: BR-31, "PAD WEAR INSPECTION" .

POWER SUPPLY CIRCUIT TERMINAL LOOSENESS AND BATTERY

Check battery for looseness on the battery positive/negative terminals and ground connection. Also make sure that battery voltage does not drop.

INSPECTION OF ABS WARNING LAMP

1. Make sure that when the ignition switch is turned ON, the ABS warning lamp turns on. If it is does not turn on, perform CAN communication circuit diagnosis. Refer to BRC-31, "CAN Communication" . Check ABS warning lamp if there is no malfunction in CAN communication circuit. Refer to BRC-35, "ABS Warning Lamp Indication Is Not Normal" .
2. Check if the ABS warning lamp turns off after the ignition switch is turned ON after the engine is started. If it does not turn off, perform self-diagnosis.
3. If ABS warning lamp has not turned off after 10 seconds the engine has been started, perform self-diagnosis of the ABS actuator and electric unit (control unit).
4. Always erase the self-diagnostic results after completing self-diagnosis. Refer to BRC-19, "ERASE MEMORY" .

TROUBLE DIAGNOSIS FOR SYSTEM

PFP:00000

Wheel Sensor

AFS002M6

INSPECTION PROCEDURE

Check each part according to CONSULT-II self-diagnostic results, and then identify the parts to be replaced.

CAUTION:

Do not check between wheel sensor terminals.

1. CHECK TIRES

Check air pressure, wear and size.

Are air pressure, wear and size within standard values?

YES >> GO TO 2.
NO >> Adjust air pressure, or replace tire.

2. CHECK SENSOR AND SENSOR ROTOR

- Check sensor rotor for damage.
- Check wheel sensor for damage, disconnection or looseness.

OK or NG

OK >> GO TO 3.
NG >> Repair wheel sensor mount or replace sensor rotor. Refer to BRC-37, "SENSOR ROTOR" , BRC-36, "WHEEL SENSORS" .

3. CHECK SELF-DIAGNOSTIC RESULTS

Check the self-diagnostic results.

Self-diagnostic results
FR RH SENSOR-1, -2
FR LH SENSOR-1, -2
RR RH SENSOR-1, -2
RR LH SENSOR-1, -2

Is above displayed on self-diagnosis display?

YES >> GO TO 4.
NO >> INSPECTION END

4. CHECK CONNECTOR

1. Turn ignition switch OFF and disconnect ABS actuator and electric unit (control unit) connector and malfunctioning wheel sensor connector. Check terminal to see if it is deformed, disconnected, loose, etc., and repair or replace it if any malfunction condition is found.
2. Reconnect connectors, drive vehicle at 30 km/h (19 MPH) or more for approximately 1 minute, and then perform self-diagnosis.

Is the result of self-diagnosis normal?

YES >> Connector terminal contact is loose, damaged, open or shorted.
NO >> GO TO 5.

5. CHECK WHEEL SENSOR HARNESS

1. Turn ignition switch OFF and disconnect malfunctioning wheel sensor connector and ABS actuator and electric unit (control unit) connector.
2. Check continuity between terminals. (Also check continuity when the steering wheel is turned right and left and when the sensor harness inside the wheel house is moved.)

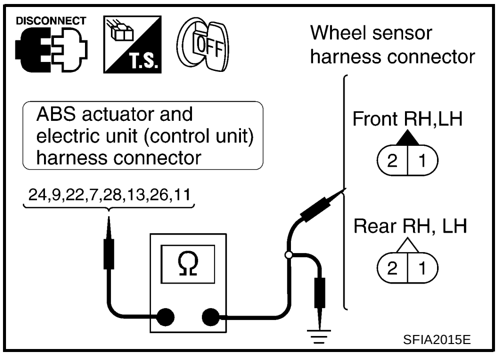

	Power supply circuit		Signal circuit		Ground circuit	
Wheel	ABS actuator and electric unit (control unit) harness connector E69	Wheel sensor (harness connector)	ABS actuator and electric unit (control unit) harness connector E69	Wheel sensor (harness connector)	ABS actuator and electric unit (control unit) harness connector E69 (signal)	Ground
Front RH (E17)	24	1	9	2	24, 9	—
Front LH (E59)	22	1	7	2	22, 7	
Rear RH (B130)	28	1	13	2	28, 13	
Rear LH (B126)	26	1	11	2	26, 11	

Power supply circuit : Continuity should exist.
Signal circuit : Continuity should exist.
Ground circuit : Continuity should not exist.

OK or NG

OK >> GO TO 6.
NG >> Repair or replace harness and connector that have malfunction.

6. CHECK WHEEL SENSOR

1. Replace wheel sensor that resulted in malfunction by self-diagnosis.
2. Reconnect connectors, drive vehicle at 30 km/h (19 MPH) or more for approximately 1 minute, and then perform self-diagnosis.

Self-diagnostic results
FR RH SENSOR-1, -2
FR LH SENSOR-1, -2
RR RH SENSOR-1, -2
RR LH SENSOR-1, -2

Is above displayed on self-diagnosis display?

YES >> Wheel sensor has malfunction.
NO >>
- Replace ABS actuator and electric unit (control unit).
- Perform to self-diagnosis again, and make sure that the result shows “NO DTC IS DETECTED. FURTHER TESTING MAY BE REQUIRED”.

ABS Actuator and Electric Unit (Control Unit)

AFS002M7

INSPECTION PROCEDURE

1. CHECK SELF-DIAGNOSTIC RESULTS

Check self-diagnostic results.

Self-diagnostic results
ABS CONTROLLER

Is above displayed on self-diagnosis display?

YES >> Replace ABS actuator and electric unit (control unit), and perform self-diagnosis again.
NO >> INSPECTION END

ABS Actuator and Electric Unit (Control Unit) Power Supply and Ground

AFS002M8

INSPECTION PROCEDURE

1. CHECK SELF-DIAGNOSTIC RESULTS

Check self-diagnostic results.

Self-diagnostic results
LOW POWER VOLTAGE

Is above displayed on self-diagnosis display?

YES >> GO TO 2.
NO >> INSPECTION END

2. CHECK CONNECTOR

1. Turn ignition switch OFF, disconnect the ABS actuator and electric unit (control unit) connector, and check the terminal for deformation, disconnection, looseness, and so on. If there is a malfunction, repair or replace the terminal.
2. Connect the connector securely and perform self-diagnosis again.

Is the result of self-diagnosis normal?

YES >> Connector terminal contact is loose, damaged, open or shorted.
NO >> GO TO 3.

3. CHECK ABS ACTUATOR AND ELECTRIC UNIT (CONTROL UNIT) POWER SUPPLY AND GROUND

1. Turn ignition switch OFF and disconnect ABS actuator and electric unit (control unit) connector.
2. Turn ignition switch ON or OFF, and then check continuity and voltage between each connector terminal and ground.

Signal	ABS actuator and electric unit (control unit) harness connector E69	Ground	Measurement condition	Volrtage
Power supply	29	—	Ignition switch ON	Battery voltage (Approx. 12 V)
		—	Ignition switch OFF	Approx. 0 V

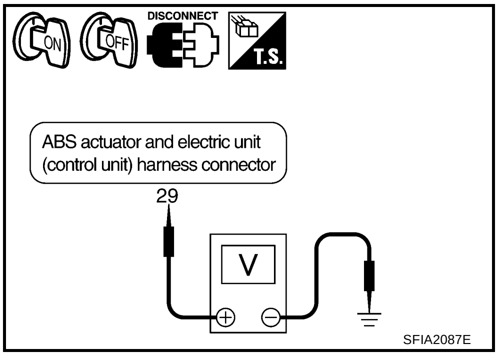

SFIA2087E

Signal	ABS actuator and electric unit (control unit) harness connector E69	Ground	Measurement condition	Continuity
Ground	16, 30	—	Ignition switch OFF	Yes

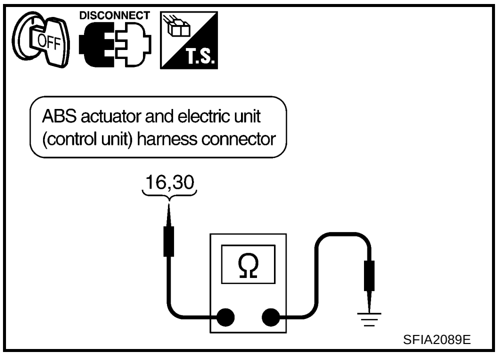

SFIA2089E

OK or NG

OK >> Check battery for terminal looseness, low voltage, etc. If any malfunction is found, repair malfunctioning parts.
NG >> Corresponding harness circuit malfunctions. Repair circuit, and perform self-diagnosis again.

ABS Actuator Relay or ABS Motor Relay

AFS002M9

INSPECTION PROCEDURE

1. CHECK ABS ACTUATOR AND ELECTRIC UNIT (CONTROL UNIT) POWER SUPPLY AND GROUND CIRCUIT

Check the self-diagnostic results.

Self-diagnostic results
FR LH IN ABS SOL
FR LH OUT ABS SOL
RR RH IN ABS SOL
RR RH OUT ABS SOL
FR RH IN ABS SOL
FR RH OUT ABS SOL
RR LH IN ABS SOL
RR LH OUT ABS SOL
MAIN RELAY
PUMP MOTOR

Is above displayed on self-diagnosis display?

YES >> GO TO 2.
NO >> INSPECTION END

2. CHECK CONNECTOR

1. Turn ignition switch OFF, disconnect the ABS actuator and electric unit (control unit) connector, and check the terminal for deformation, disconnection, looseness, and so on. If there is a malfunction, repair or replace the terminal.
2. Connect the connector securely and perform self-diagnosis again.

Is the result of self-diagnosis normal?

YES >> Connector terminal contact is loose, damaged, open or shorted.
NO >> GO TO 3.

3. CHECK ABS ACTUATOR RELAY OR ABS MOTOR RELAY POWER SUPPLY CIRCUIT

1. Turn ignition switch OFF and disconnect ABS actuator and electric unit (control unit) connector.
2. For the ABS actuator relay, measure voltage between the harness connector terminal 15 and ground. For the ABS motor relay, measure voltage between the harness connector terminal 1 and ground.

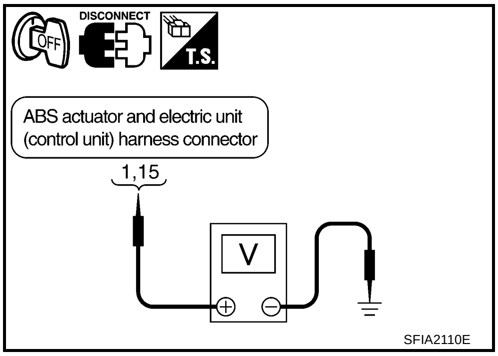

SFIA2110E

ABS actuator and electric unit (control unit) harness connector E69	Ground	Voltage
1, 15	—	Battery voltage (Approx. 12 V)

OK or NG

OK >> GO TO 4.
NG >> Circuit malfunction between the battery and ABS actuator and electric unit (control unit). Repair circuit.

4. CHECK ABS ACTUATOR AND ELECTRIC UNIT (CONTROL UNIT) GROUND CIRCUIT

Check continuity between ABS actuator and electric unit (control unit) harness connector E69 terminals 16, 30 and ground.

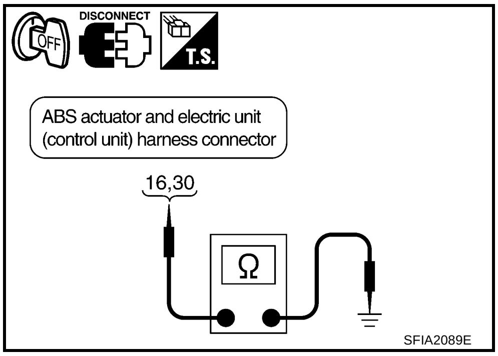

SFIA2089E

ABS actuator and electric unit (control unit) harness connector E69	Ground	Continuity
16, 30	—	Yes

OK or NG

OK >> Replace ABS actuator and electric unit (control unit).
NG >> Open or short in harness. Repair or replace the harness, and perform self-diagnosis again.

G Sensor (Only AWD Models)

AFS002P9

INSPECTION PROCEDURE

1. CHECK SELF-DIAGNOSTIC RESULTS

Check the self-diagnostic results.

Self-diagnostic results
G SENSOR

Is above displayed on self-diagnosis display?

YES >> GO TO 2.
NO >> INSPECTION END

2. CHECK CONNECTOR

1. Turn ignition switch OFF, disconnect the ABS actuator and electric unit (control unit) and G sensor connector, and check the terminal for deformation, disconnection, looseness, and so on. If there is a malfunction, repair or replace the terminal.
2. Reconnect connector securely, and perform self-diagnosis.

Is the result of self-diagnosis normal?

YES >> Connector terminal contact is loose, damaged, open or shorted.
NO >> GO TO 3.

3. CHECK G SENSOR HARNESS

1. Turn ignition switch OFF and disconnect G sensor and ABS actuator and electric unit (control unit) connectors.
2. Check continuity between G sensor harness connector M57 and ABS actuator and electric unit (control unit) harness connector E69.

G sensor harness connector M57	ABS actuator and electric unit (control unit) harness connector E69	Continuity
1	21	Yes
2	12	
3	10	
4	25	

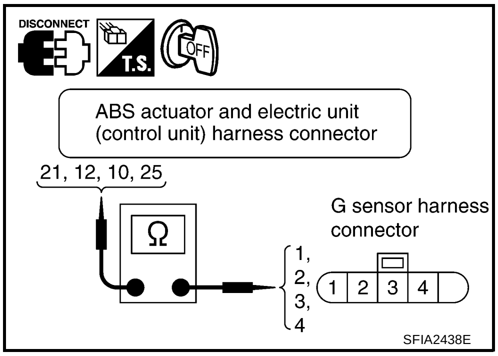

OK or NG

OK >> GO TO 4.
NG >> Circuit malfunction between G sensor and ABS actuator and electric unit (control unit). Repair harness.

4. CHECK G SENSOR POWER SUPPLY CIRCUIT

1. Turn ignition switch ON.
2. Check voltage between G sensor harness connector M57 terminal 5 and ground.

Voltage : Battery voltage (Approx. 12 V)

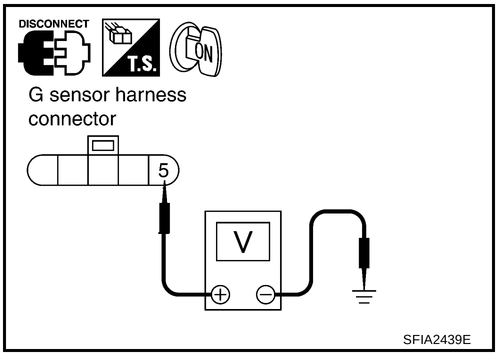

OK or NG

OK >> GO TO 5.
NG >> G sensor power supply circuit malfunction. Repair circuit.

5. CHECK G SENSOR

1. Remove G sensor from the vehicle. Refer to BRC-40, "G SENSOR" .
2. Connect the following terminals between G sensor and connector.

G sensor connector	Harness connector M57
1	1
2	2
5	5

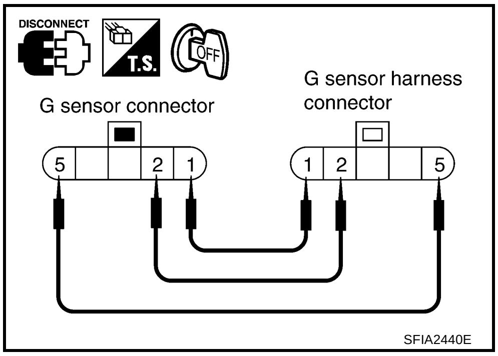

3. Check voltage between the following G sensor terminals when ignition switch turns ON and G sensor is in the following condition.

G sensor status	G sensor connector terminal 5-4	G sensor connector terminal 5-3
Horizontal	Approx. 5 V	Approx. 5 V
Longitudinally tilt by 20°	Approx. 10 V	Approx. 10 V
Longitudinally tilt by 40°	Approx. 5 V	Approx. 10 V

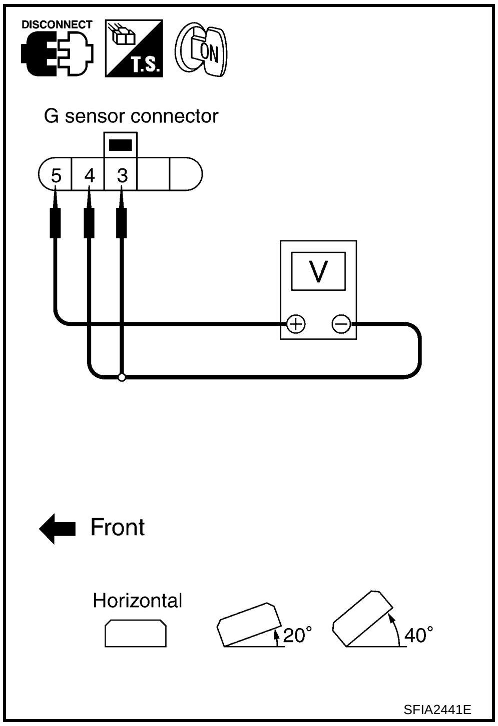

OK or NG

OK >> ABS actuator and electric unit (control unit) malfunction. Replace ABS actuator and electric unit (control unit).

NG >> G sensor malfunction. Replace G sensor, and perform self-diagnosis.

CAN Communication

AFS002MC

INSPECTION PROCEDURE

1. CHECK CONNECTOR

1. Turn ignition switch OFF, disconnect the ABS actuator and electric unit (control unit) connector, and check the terminal for deformation, disconnection, looseness, and so on. If there is a malfunction, repair or replace the terminal.
2. Connect connector securely and perform self-diagnosis again.

Self-diagnostic results
CAN COMM CIRCUIT

Is above displayed on self-diagnosis display?

YES >> Print out the self-diagnostic results and refer to LAN-4, "TROUBLE DIAGNOSES WORK FLOW" .

NO >> Connector terminal connector is loose, damaged, open or shorted.

Component Inspection

AFS002QA

PARKING BRAKE SWITCH

Refer to DI-25, "Wiring Diagram — WARN —" , and check parking brake switch.

BRAKE FLUID LEVEL SWITCH

Refer to DI-25, "Wiring Diagram — WARN —" , and check brake fluid level switch.

TROUBLE DIAGNOSIS FOR SYMPTOMS

PFP:00007

Excessive ABS Function Operation Frequency

AFS002MD

1. CHECK START

Check longitudinal brake force distribution using a brake tester. Refer to BR-37, "SERVICE DATA AND SPECIFICATIONS (SDS)" .

OK or NG

OK >> GO TO 2.
NG >> • Check the following system. If any malfunction is found, repair or replace malfunctioning parts.
- Brake booster. Refer to BR-21, "BRAKE BOOSTER" .
- Hydraulic line. Refer to BR-11, "BRAKE PIPING AND HOSE" .
- Front brake caliper. Refer to BR-25, "FRONT DISC BRAKE" .
- Rear brake caliper. Refer to BR-31, "REAR DISC BRAKE" .

2. CHECK FRONT AND REAR AXLE

Make sure that there is no excessive play in the front and rear axles. Refer to Front: FSU-6, "On-Vehicle Inspection and Service" , Rear: RSU-5, "On-Vehicle Inspection and Service" .

OK or NG

OK >> GO TO 3.
NG >> Repair.

3. CHECK WHEEL SENSOR AND SENSOR ROTOR

Check wheel sensor and sensor rotor for the following.

- Wheel sensor installation for damage
- Wheel sensor rotor installation for damage
- Wheel sensor connector connection
- Wheel sensor harness inspection

OK or NG

OK >> GO TO 4.
NG >> • Replace wheel sensor or sensor rotor.
• Repair harness.

4. CHECK ABS WARNING LAMP DISPLAY

Make sure that the ABS warning lamp is turned off after the ignition switch is turned ON or when driving.

OK or NG

OK >> Normal
NG >> Perform self-diagnosis. Refer to BRC-18, "Self-Diagnosis" .

Unexpected Pedal Reaction

AFS002ME

1. CHECK BRAKE PEDAL STROKE

Check brake pedal stroke. Refer to BR-6, "Inspection and Adjustment" .

Is the stroke too big?

YES >> • Bleed air from the brake piping. Refer to BR-10, "Bleeding Brake System" .
• Check brake pedal, brake booster, and master cylinder for mount play, looseness, brake system fluid leakage, etc. Repair if necessary. Refer to Brake pedal: BR-7, "COMPONENTS" , brake booster and master cylinder: BR-22, "COMPONENTS" .
NO >> GO TO 2.

2. CHECK FUNCTION

Disconnect ABS actuator and electric unit (control unit) connector to deactivate ABS. Check if braking force is normal in this condition. Connect connector after inspection.

OK or NG

OK >> GO TO procedure 3″CHECK WHEEL SENSOR AND SENSOR ROTOR″. Refer to BRC-33, "Excessive ABS Function Operation Frequency" .

NG >>
- Check the following system. If any malfunction is found, repair or replace malfunctioning parts.
  - Brake booster. Refer to BR-21, "BRAKE BOOSTER" .
  - Hydraulic line. Refer to BR-11, "BRAKE PIPING AND HOSE" .
  - Front brake caliper. Refer to BR-25, "FRONT DISC BRAKE" .
  - Rear brake caliper. Refer to BR-31, "REAR DISC BRAKE" .

The Stopping Distance Is Long

AFS002MF

CAUTION:

The stopping distance on slippery road surfaces might be longer with the ABS operating than when the ABS is not operating.

1. CHECK FUNCTION

Turn ignition switch OFF. Disconnect ABS actuator and electric unit (control unit) connector to deactivate ABS. In this condition, check stopping distance. After inspection, connect connector.

OK or NG

OK >> GO TO procedure 3 "CHECK WHEEL SENSOR AND SENSOR ROTOR". Refer to BRC-33, "Excessive ABS Function Operation Frequency" .

NG >>
- Bleed air from the brake piping. Refer to BR-10, "Bleeding Brake System" .
- Check the following system. If any malfunction is found, repair or replace malfunctioning parts.
  - Brake booster. Refer to BR-21, "BRAKE BOOSTER" .
  - Hydraulic line. Refer to BR-11, "BRAKE PIPING AND HOSE" .
  - Front brake caliper. Refer to BR-25, "FRONT DISC BRAKE" .
  - Rear brake caliper. Refer to BR-31, "REAR DISC BRAKE" .

ABS Function Does Not Operate

AFS002MG

CAUTION:
ABS does not operate when speed is 10 km/h (6 MPH) or lower.

1. CHECK ABS WARNING LAMP DISPLAY

Make sure that the ABS warning lamp is turned off after the ignition switch is turned ON or when driving.

OK or NG

OK >> GO TO procedure 3″CHECK WHEEL SENSOR AND SENSOR ROTOR″. Refer to BRC-33, "Excessive ABS Function Operation Frequency" .
NG >> Perform self-diagnosis. Refer to BRC-18, "Self-Diagnosis" .

Pedal Vibration or ABS Operation Sound Occurs

AFS002MH

CAUTION:
Under the following conditions, ABS is activated and vibration is felt when brake pedal is lightly depressed (just place a foot on it). However, this is normal.

- **When shifting gears**
- **When driving on slippery road**
- **During cornering at high speed**
- **When passing over bumps or grooves [at approximately 50 mm (1.97 in) or more]**
- **When pulling away just after starting engine [at approximately 10 km/h (6 MPH) or more]**

1. SYMPTOM CHECK 1

Check if there is pedal vibration or operation noise when the engine is started.

Do symptoms occur?

YES >> GO TO 2.
NO >> Perform self-diagnosis. Refer to BRC-18, "Self-Diagnosis" .

2. SYMPTOM CHECK 2

Check symptoms when electrical component (headlamps, etc.) switches are operated.

Do symptoms occur?

YES >> Check if there is a radio, antenna, antenna lead wire, or wiring close to the control unit. If there is, move it farther away.
NO >> GO TO procedure 3″CHECK WHEEL SENSOR AND SENSOR ROTOR″. Refer to BRC-33, "Excessive ABS Function Operation Frequency" .

ABS Warning Lamp Indication Is Not Normal

AFS002QB

NOTE:
Lighting condition of ABS warning lamp refer to BRC-23, "ON and OFF Timing for ABS Warning Lamp" .

1. CHECK COMBINATION METER INDICATION

Check the combination meter indication and operation. Refer to DI-14, "Self-Diagnosis Mode of Combination Meter" .

OK or NG

OK >> GO TO 2.
NG >> Combination meter is malfunctioning. Check combination meter. Refer to DI-4, "COMBINATION METERS" .

2. CHECK SELF DIAGNOSTIC RESULTS

Check the self-diagnostic results of ABS actuator and electric unit (control unit). Refer to BRC-18, "Self-Diagnosis" .

OK or NG

OK >> GO TO procedure 1 of symptom 6.
NG >> Check the items indicated with self-diagnosis.

A B C D E BRC G H I J K L M

WHEEL SENSORS

PFP:47910

Removal and Installation

AFS002MI

COMPONENTS

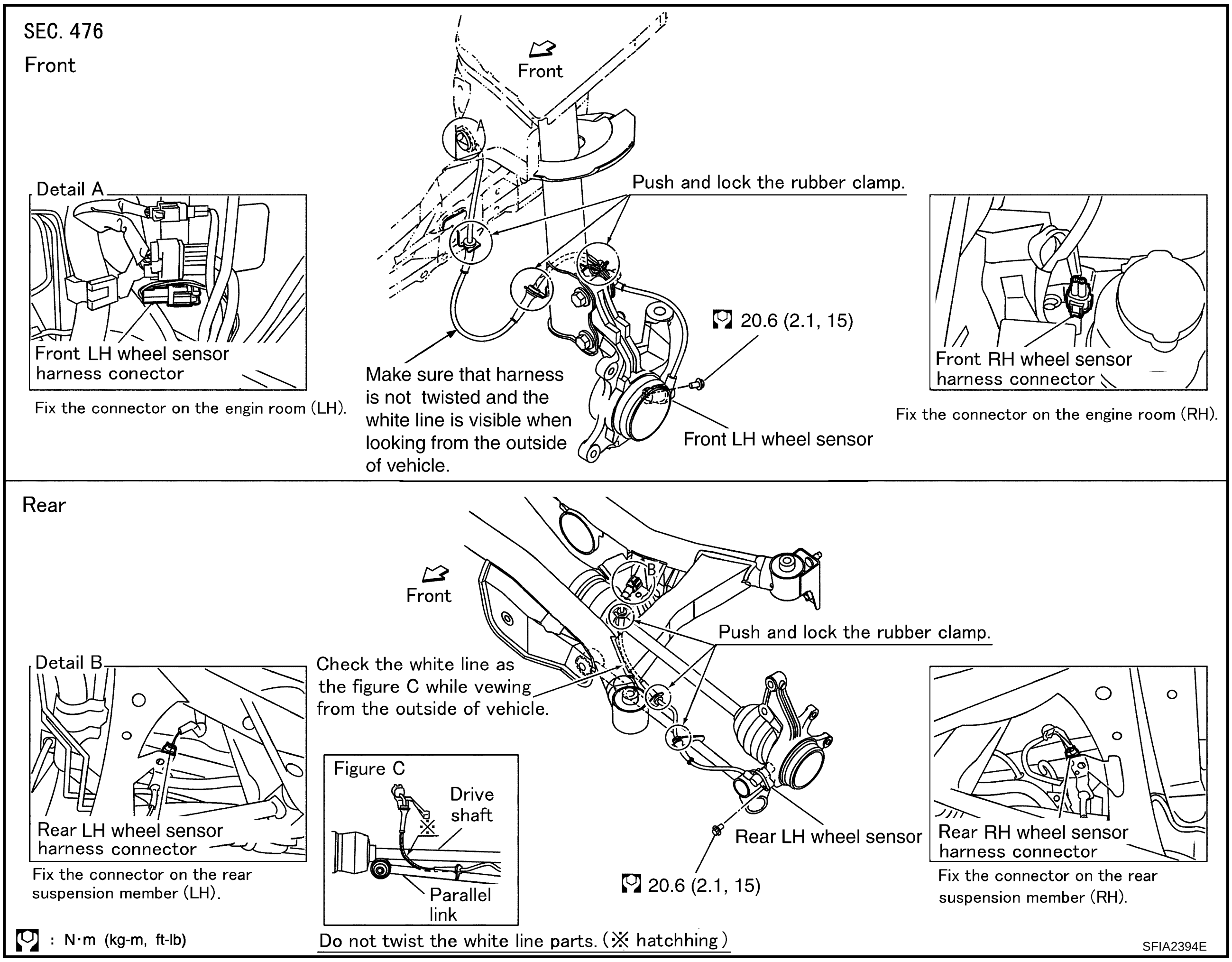

REMOVAL

Be careful of the following.

CAUTION:

When removing the sensor, do not rotate it, if possible, and also do not forcibly pull the sensor harness.

INSTALLATION

Tighten the mounting bolts and nuts to the specified torque. Refer to BRC-36, "COMPONENTS" .

CAUTION:

Be careful of the following when installing sensor.

- **When installing, make sure there is no foreign material such as iron chips on pick-up and mounting hole of sensor. Make sure no foreign material has been caught in the sensor rotor. Remove any foreign material and clean the mount.**
- **When installing front sensor, be sure to press rubber grommets in until they lock at the three locations shown in the figure (2 at shock absorbers and 1 at body panel). When installed, harness must not be twisted. White line on harness must be visible from front.**
- **When installing rear sensor, attach harness at rear suspension member securely. Besides, harness must not be twisted when installed.**

SENSOR ROTOR

PFP:47970

Removal and Installation (2WD Models)

AFS002PY

REMOVAL

Front

Remove front sensor rotor from front drive shaft. Refer to FAX-20, "Disassembly and Assembly (Models with 2WD: RH)" , FAX-28, "Disassembly and Assembly (LH)" .

Rear

Follow procedure below to remove rear sensor rotor.

- Remove axle housing. Refer to RAX-5, "Removal and Installation" .
- Remove rear sensor rotor from axle housing. Refer to RAX-7, "Disassembly and Assembly" .

INSTALLATION

Front

Install front sensor rotor to front drive shaft. Refer to FAX-20, "Disassembly and Assembly (Models with 2WD: RH)" , FAX-28, "Disassembly and Assembly (LH)" .

Rear

Follow procedure below to install rear sensor rotor.

- Install sensor rotor to axle housing. Refer to RAX-7, "Disassembly and Assembly" .
- Install axle housing. Refer to RAX-5, "Removal and Installation" .

Removal and Installation (AWD Models)

AFS002PZ

REMOVAL

Front

Remove front sensor rotor from drive shaft. Refer to FAX-25, "Disassembly and Assembly (Models with AWD: RH)" , FAX-28, "Disassembly and Assembly (LH)" .

Rear

Follow procedure below to remove rear sensor rotor. Refer to RAX-22, "Disassembly and Assembly" .

- Remove rear drive shaft. Refer to RAX-21, "Removal and Installation" .
- Remove sensor rotor from rear drive shaft.

INSTALLATION

Front

Install front sensor rotor to front drive shaft. Refer to FAX-25, "Disassembly and Assembly (Models with AWD: RH)" , FAX-28, "Disassembly and Assembly (LH)" .

Rear

Follow procedure below to install rear sensor rotor.

- Install rear sensor rotor to rear drive shaft. Refer to RAX-22, "Disassembly and Assembly" .
- Install rear drive shaft. Refer to RAX-21, "Removal and Installation" .

ACTUATOR AND ELECTRIC UNIT (ASSEMBLY)

PFP:47660

Removal and Installation

AFS002ML

COMPONENTS

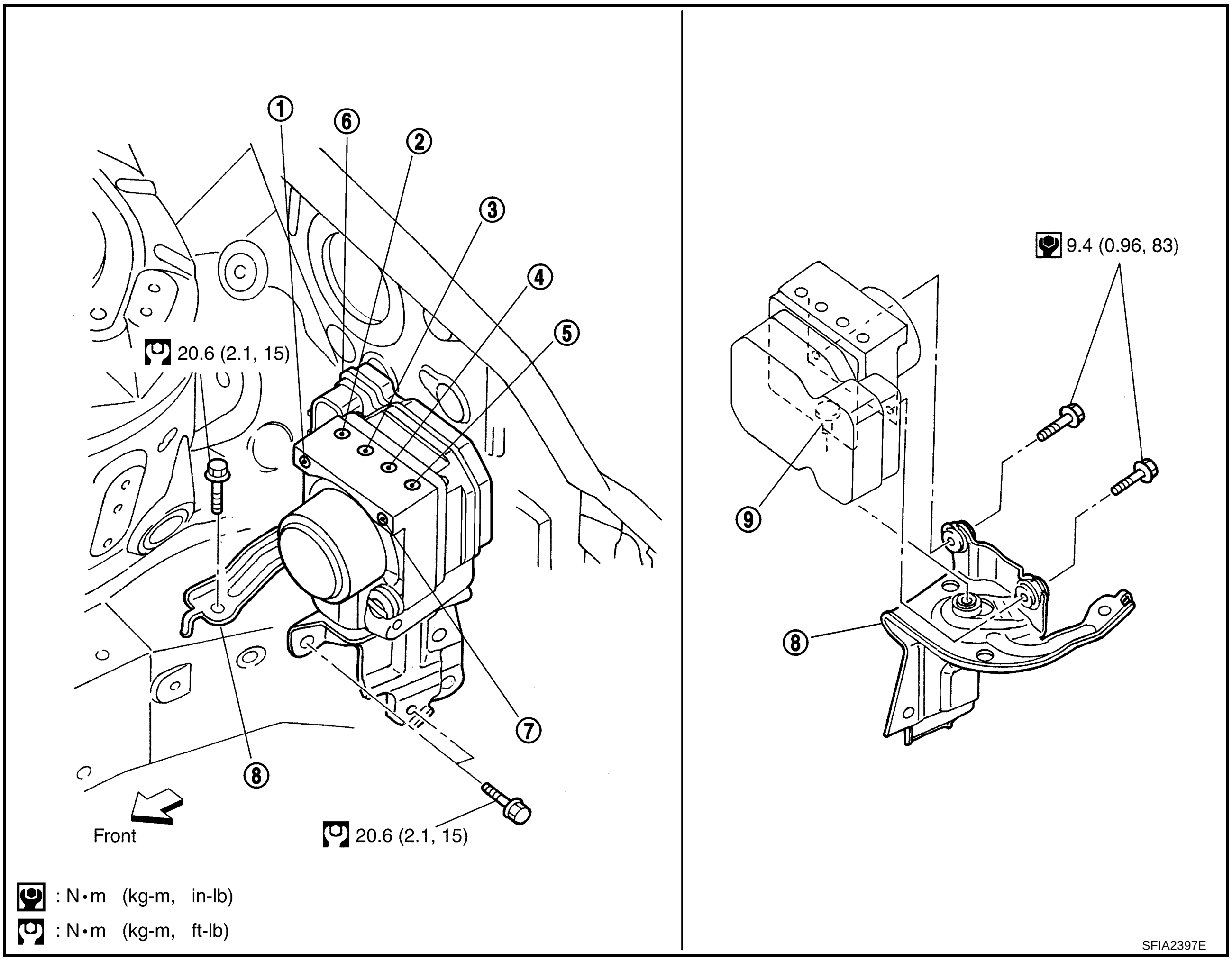

1.	From master cylinder secondary side	2.	To front RH caliper	3.	To rear LH caliper
4.	To rear RH caliper	5.	To front LH caliper	6.	ABS actuator and electric unit (control unit)
7.	From master cylinder primary side	8.	Bracket	9.	Shaft

CAUTION:

- **If the part number on the part number label (pasted on actuator upper surface) is the same, ABS actuator and electric unit (control unit) cannot be used on another vehicle.**
  If it is used on another vehicle, ABS warning lamp may turn on or ABS may not operate normally. When replacing ABS actuator and electric unit (control unit), must use new service parts.
- **Before servicing, disconnect battery terminals.**
- **To remove brake tube, use a flare nut torque wrench to prevent flare nuts and brake tube from being damaged. To install, use a flare nut torque wrench (commercial service tool) and tighten to the specified torque.**
- **Do not apply excessive impact to ABS actuator and electric unit (control unit), such as dropping it.**
- **Do not remove and install ABS actuator and electric unit (control unit) by holding harness.**

REMOVAL

1. Disconnect ABS actuator and electric unit (control unit) connector.
2. Loosen brake tube flare nuts, then remove brake tubes from ABS actuator and electric unit (control unit).
3. Remove ABS actuator and electric unit (control unit) mounting bolts.
4. Remove ABS actuator and electric unit (control unit) from vehicle.

INSTALLATION

Install in the reverse order of removal.

CAUTION:

Be careful of the following when installing ABS actuator and electric unit (control unit).

- **Tighten the mounting bolts and nuts to the specified torque.**
- **After the work, bleed air from brake piping. Refer to BR-10, "Bleeding Brake System" .**
- **After installing body harness connector in the ABS actuator and electric unit (control unit), make sure connector is securely locked.**

G SENSOR

PFP:47930

Removal and Installation (Only AWD Models)

AFS002MJ

CAUTION:

- **Do not drop or strike the G sensor, because it is sensitive to impact.**
- **Do not use power tool, etc. Because G sensor is weak for the impact.**

REMOVAL

1. Remove center console. Refer to IP-14, "Center Console" .
2. Disconnect harness connector.
3. Remove mounting nuts and remove G sensor.

   NOTE:
   There is not need to detach the G sensor main body from a bracket.

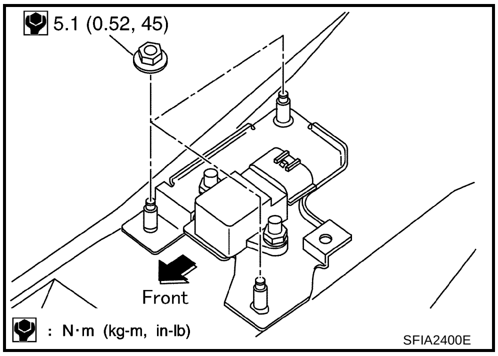

INSTALLATION

Install in the reverse order of removal observing the precautions above.

PRECAUTIONS

PFP:00001

Precautions for Supplemental Restraint System (SRS) “AIR BAG” and “SEAT BELT PRE-TENSIONER”

AFS002QJ

The Supplemental Restraint System such as “AIR BAG” and “SEAT BELT PRE-TENSIONER”, used along with a front seat belt, helps to reduce the risk or severity of injury to the driver and front passenger for certain types of collision. Information necessary to service the system safely is included in the SRS and SB section of this Service Manual.

WARNING:

- **To avoid rendering the SRS inoperative, which could increase the risk of personal injury or death in the event of a collision which would result in air bag inflation, all maintenance must be performed by an authorized NISSAN/INFINITI dealer.**
- **Improper maintenance, including incorrect removal and installation of the SRS, can lead to personal injury caused by unintentional activation of the system. For removal of Spiral Cable and Air Bag Module, see the SRS section.**
- **Do not use electrical test equipment on any circuit related to the SRS unless instructed to in this Service Manual. SRS wiring harnesses can be identified by yellow and/or orange harnesses or harness connectors.**

Precautions for Brake System

AFS002Q0

- Recommended fluid is brake fluid “DOT 3”. Refer to MA-10, "RECOMMENDED FLUIDS AND LUBRICANTS"
- Do not reuse drained brake fluid.
- Be careful not to splash brake fluid on painted areas. If brake fluid is splashed, wipe it off and flush area with water immediately.
- Do not use mineral oils such as gasoline or kerosene. They will ruin rubber parts of the hydraulic system.
- Use flare nut torque wrench when removing and installing brake tube.
- Brake system is an important safety part. If a brake fluid leak is detected, always disassemble the affected part. If a malfunction is detected, replace part with a new one.
- Before working, turn ignition switch OFF and disconnect connectors of VDC/TCS/ABS control unit or battery cable.
- When installing brake piping, be sure to check torque.

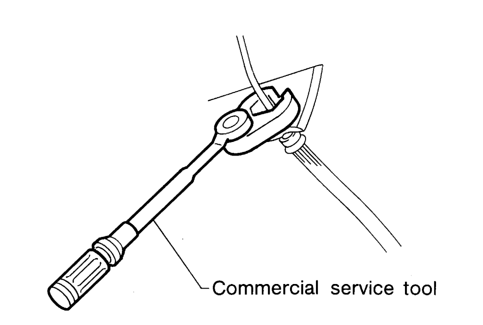

SBR686C

WARNING:

Clean brake pads and shoes with a waste cloth, then wipe with a dust collector.

Precautions for Brake Control

AFS002NX

- Just after starting vehicle after ignition switch ON, brake pedal may vibrate or motor operating noise may be heard from engine room. This is a normal status of operation check.
- When an error is indicated by ABS or another warning lamp, collect all necessary information from customer (what symptoms are present under what conditions) and check for simple causes before starting diagnostic servicing. Besides electrical system inspection, check booster operation, brake fluid level, and oil leaks.
- If tire size and type are used in an improper combination, or brake pads are not Genuine NISSAN parts, stopping distance or steering stability may deteriorate.
- If there is a radio, antenna, or antenna lead-in wire (including wiring) near control module, ABS function may have a malfunction or error.
- If aftermarket parts (car stereo, CD player, etc.) have been installed, check for incidents such as harness pinches, open circuits, and improper wiring.
- If non-standard suspension parts (shock absorber, strut, spring, bushing, etc.) and reinforcements (roll bar, tower bar, etc.) are attached, or if suspension parts deteriorate significantly, VDC may not operate normally, VDC OFF indicator lamp and SLIP indicator lamp may turn on.
- If non-standard engine components (muffler, etc.) are attached, VDC may not operate normally, VDC OFF indicator lamp and SLIP indicator lamp may turn on.

PREPARATION

PFP:00002

Commercial Service Tools

AFS002PA

Tool name	Description
1.Flare nut crowfoot a: 10 mm (0.39 in) / 12 mm (0.47 in) 2.Torque wrench 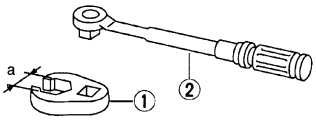 S-NT360	Removing and installing each brake piping

ON-VEHICLE SERVICE

PFP:00000

Adjustment of Steering Angle Sensor Neutral Position

AFS002NZ

In case of doing work that applies to the list below, make sure to adjust neutral position of steering angle sensor before running vehicle.

Situation	Adjustment of Steering Angle Sensor Neutral Position
Removing/Installing VDC/TCS/ABS control unit	–
Replacing VDC/TCS/ABS control unit	–
Removing/Installing steering angle sensor	×
Removing/Installing steering components	×
Removing/Installing suspension components	×
Change tires to new ones	–
Tire rotation	–
Adjusting wheel alignment	×

×: Required

–: Not required

CAUTION:

To adjust neutral position of steering angle sensor, make sure to use CONSULT-II. (Adjustment cannot be done without CONSULT-II.)

1. Stop vehicle with front wheels in straight-ahead position.
2. Connect CONSULT-II and CONSULT-II converter to data link connector on vehicle.
3. Turn ignition switch ON (do not start engine) and touch “ABS”, “WORK SUPPORT” and “ST ANGLE SENOR ADJUSTMENT” on CONSULT-II screen in this order.
4. Touch “START”.

   CAUTION:

   Do not touch steering wheel while adjusting steering angle sensor.
5. After approximately 10 seconds, touch “END”. (After approximately 60 seconds, it ends automatically.)
6. Turn ignition switch OFF, then turn it ON again.

   CAUTION:

   Be sure to perform above operation.
7. Run vehicle with front wheels in straight-ahead position, then stop.

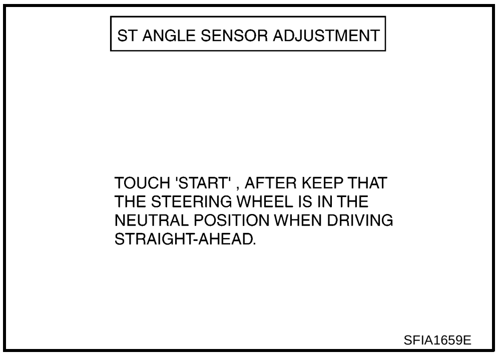

8. Select “DATA MONITOR”, “ECU INPUT SIGNALS”, and “STR ANGLE SIG” on CONSULT-II screen. Then make sure that “STR ANGLE SIG” is within 0 ±3.5°. If value is more than specification, repeat steps 3 to 7.
9. Erase memory of VDC/TCS/ABS control unit and ECM. Refer to BRC-61, "ERASE MEMORY" , EC-83, "TROUBLE DIAGNOSIS" .
10. Turn ignition switch OFF.

SYSTEM DESCRIPTION

PFP:00000

System Diagram

AFS002O0

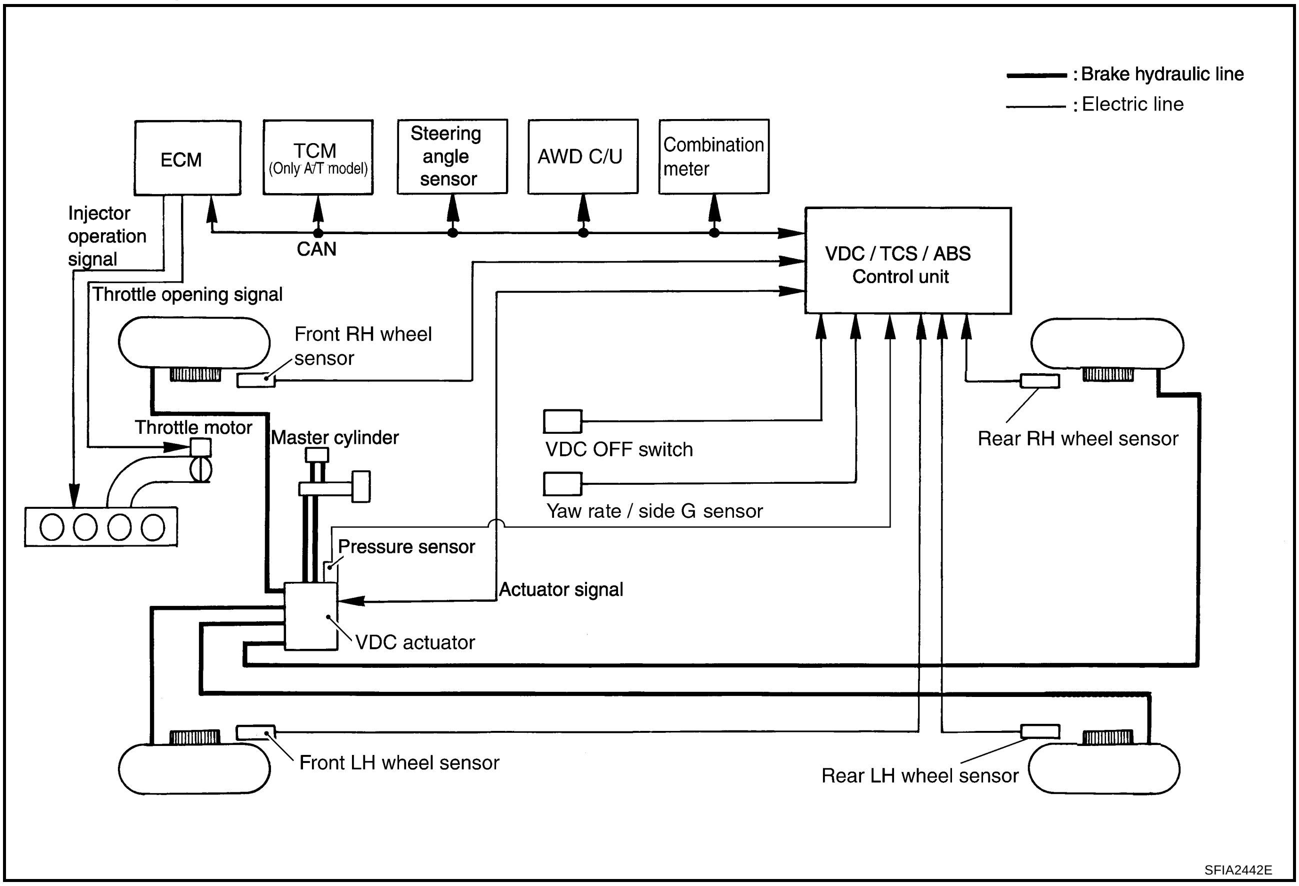

Functions

AFS002O1

ABS

- The Anti-Lock Brake System is a function that detects wheel revolution while braking, and it improves handling stability during sudden braking by electrically preventing 4 wheels lock. Maneuverability is also improved for avoiding obstacles.
- Electrical System Diagnosis by CONSULT-II is available.

EBD

- Electronic Brake Distributor is a function that detects subtle slippages between the front and rear tire during braking, and it improves handling stability by electronically controlling the Brake Fluid Pressure which results in reduced rear tire slippage.
- Electrical System Diagnosis by CONSULT-II is available.

ABLS (ACTIVE BRAKE LSD)

- Active brake LSD system is detects rotation differentials (the low μ side: high rpm, high μ side: low rpm) which are generated to the right and left wheels when starting. And the system also controls braking (brake hydraulic pressure) by electronic control. And then it facilitates the starts by increasing a driving force of the wheel on the high μ side after restraining the increase of slips of the wheel on the low μ side.

  NOTE:
  μ: Coefficient of friction

CAUTION:
ABLS also operates when VDC/TCS function is cancelled after pressing VDC OFF switch.

TCS

- VDC/TCS/ABS control unit detects a spin at drive wheels by comparing wheel speed signals from all 4 wheels. At this time, output from control unit controls brake fluid pressure to wheels while cutting fuel to engine and closing throttle valve to reduce engine torque. Furthermore, throttle position is continuously controlled to insure appropriate engine torque at all times.

- During TCS operation, it informs driver of system operation by flashing SLIP indicator lamp.
- Electrical System Diagnosis by CONSULT-II is available.

VDC

- In addition to TCS/ABS function, VDC detects driver's steering operation amount and brake pedal travel from steering angle sensor and pressure sensor. Using information from yaw rate/side G sensor and wheel sensor, VDC judges driving condition (conditions of under steer and over steer) to improve stability by controlling brake application to 4 wheels and engine output.
- During VDC operation, SLIP indicator lamp flashes to inform driver of VDC operation.
- Electrical System Diagnosis by CONSULT-II is available.

A B C D E BRC G H I J K L M

Operation That Is Not “System Error”

AFS002O2

ABS

- When starting engine or just after starting vehicle, brake pedal may vibrate or the motor operating noise may be heard from engine room. This is a normal states of the operation check.
- During ABS operation, brake pedal lightly vibrates and a mechanical noise may be heard. This is normal.
- Stopping distance may be longer than that of vehicles without ABS when vehicle drives on rough, gravel, or snow-covered (fresh, deep snow) roads.

TCS

- During TCS operation, body and brake pedal lightly vibrate and mechanical noises may be heard. This is normal.
- Depending on road circumstances, driver may have a sluggish feel. This is normal, because optimum traction has highest priority under TCS operation.
- When vehicle is passing through a road where surface friction coefficient varies, downshifting or depressing accelerator pedal fully may activate TCS temporarily.

VDC

- During VDC operation, body and brake pedal lightly vibrate and mechanical noises may be heard. This is normal.
- If vehicle is rotated on turn table, or rolled and rocked on ship, ABS warning lamp, VDC OFF indicator lamp and SLIP indicator lamp may turn on. In this case, start engine on normal road again. If ABS warning lamp, VDC OFF indicator lamp, and SLIP indicator lamp turn off after restart, it is normal.
- When starting TCS or VDC under rapid acceleration or hard turn, operating noise by brake pedal is generated. However, this is not abnormal. This is because TCS and VDC are functioning normally.
- When driving in steep slope such as bank, ABS warning lamp, VDC OFF indicator lamp, and SLIP indicator lamp may turn on. In this case, start engine on normal road again. If ABS warning lamp, VDC OFF indicator lamp and SLIP indicator lamp turn off after restart, it is normal.
- A malfunction oriented Yaw rate / side G sensor may occur under hard turn like spin turn, rapid acceleration turn, drift run, etc when VDC function is OFF (VDC OFF SW ON). It is not abnormal if it is possible to return to a normal position after restarting engine. Then erase the memory of Self-Diagnosis. Refer to BRC-61, "ERASE MEMORY" . .

Hydraulic Circuit Diagram

AFS002O4

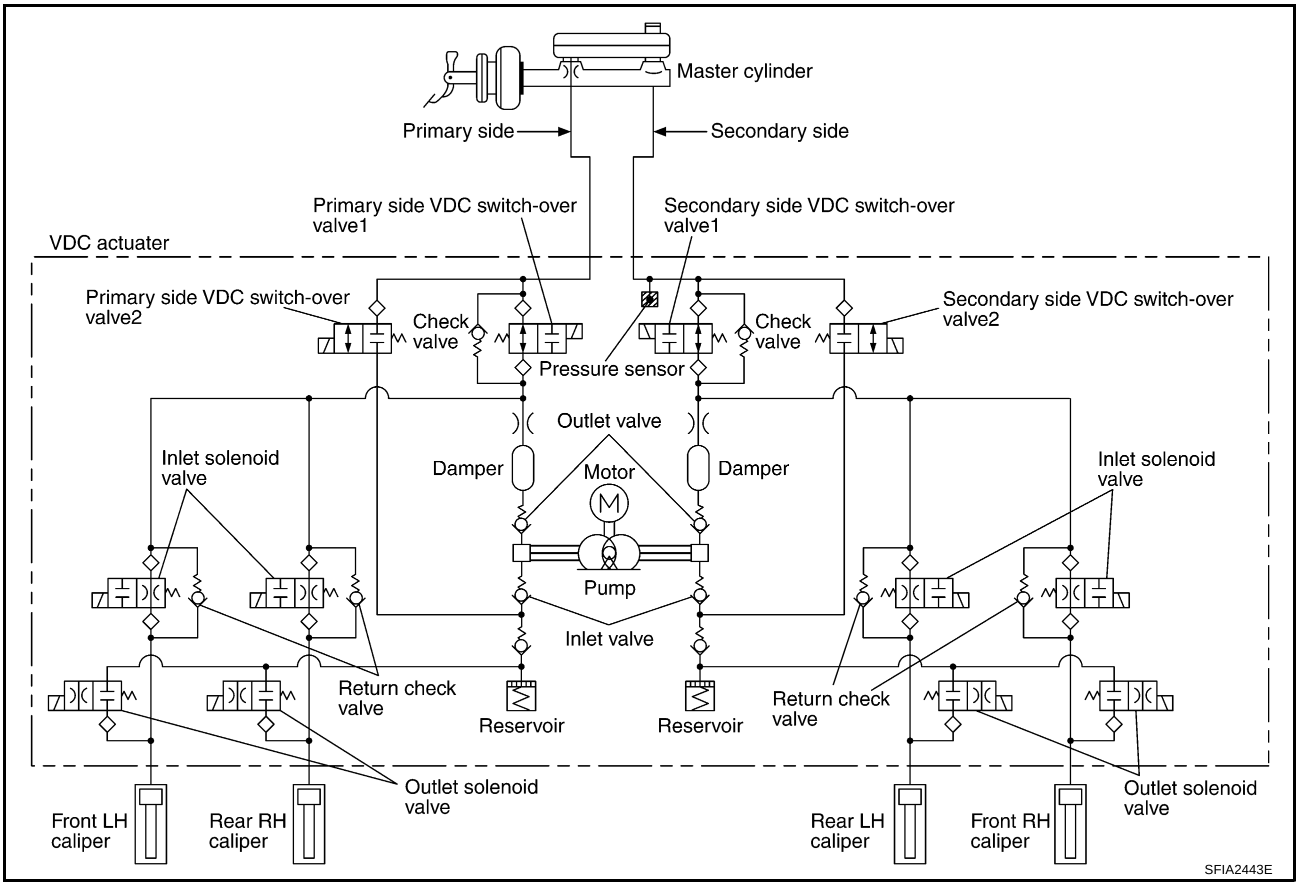

CAN Communication

AFS0035M

SYSTEM DESCRIPTION

CAN (Controller Area Network) is a serial communication line for real time application. It is an on-vehicle multiplex communication line with high data communication speed and excellent error detection ability. Many electronic control units are equipped onto a vehicle, and each control unit shares information and links with other control units during operation (not independent). In CAN communication, control units are connected with 2 communication lines (CAN H line, CAN L line) allowing a high rate of information transmission with less wiring. Each control unit transmits/receives data but selectively reads required data only.

For details, refer to LAN-21, "CAN Communication Unit" .

TROUBLE DIAGNOSIS

PFP:00004

Fail-Safe Function

AFS0038I

ABS, EBD, ABLS

In case of electrical malfunction with the ABS, ABS warning lamp, VDC OFF indicator lamp, SLIP indicator lamp will turn on. In case of electrical incidents with EBD, ABS warning lamp, VDC OFF indicator lamp, SLIP indicator lamp and brake warning lamp will turn on. Simultaneously, the VDC/ TCS/ABS become one of the following conditions of the Fail-Safe function.

1. For ABS malfunction, only the EBD is activated and the condition of the vehicle is the same condition of vehicles without VDC/TCS/ABS equipment.

   NOTE:
   In condition 1 described above, an ABS self diagnosis sound may be heard. That is a normal condition because a self diagnosis for “Ignition switch ON” and “The first starting” are being performed.
2. For EBD malfunction, the EBD, ABLS and ABS become inoperative, and the condition of the vehicle is the same as the condition of vehicles without VDC/TCS/ABS, EBD equipment.
3. For ABLS malfunction, only the ABLS become inoperative, and the condition of the vehicle is the same condition of vehicles without ABLS equipment.

VDC/TCS

In case of VDC/TCS system malfunction, the VDC OFF indicator lamp and SLIP indicator lamp or only VDC OFF indicator lamp are turned on, and the condition of the vehicle is the same as the condition of vehicles without VDC/TCS equipment. In case of electrical malfunction with the VDC/TCS system, the ABS control continues to operate normally without VDC/TCS control.

CAUTION:

If the Fail-Safe function is activated, then perform the self diagnosis for VDC/TCS/ABS control system.

How to Perform Trouble Diagnosis For Quick and Accurate Repair

AFS002O6

INTRODUCTION

- Most important point to perform diagnosis is to understand systems (control and mechanism) in vehicle thoroughly.
- It is also important to clarify customer complaints before inspection.
  First of all, reproduce symptom, and understand it fully.
  Ask customer about his/her complaints carefully. In some cases, it will be necessary to check symptom by driving vehicle with customer.

  NOTE:
  Customers are not professionals. Do not assume “maybe customer means...” or “maybe customer mentioned this symptom”.

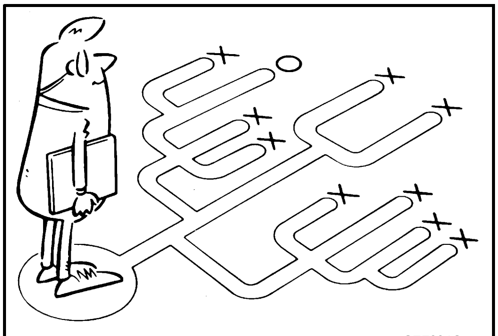

SEF234G

- It is essential to check symptoms right from beginning in order to repair a malfunction completely.
  For an intermittent malfunction, it is important to reproduce symptom based on interview with customer and past examples. Do not perform inspection on ad hoc basis. Most intermittent malfunctions are caused by poor contacts. In this case, it will be effective to shake suspected harness or connector by hand. When repairs are performed without any symptom check, no one can judge if malfunction has actually been eliminated.
- After diagnosis, make sure to perform “erase memory”. Refer to BRC-61, "ERASE MEMORY" .

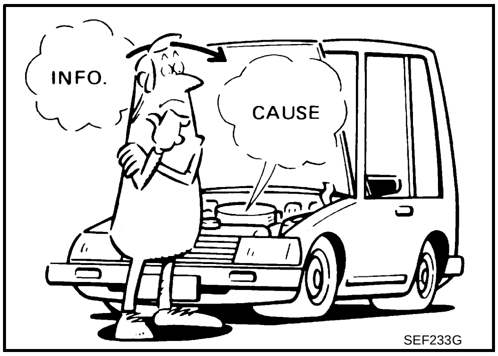

SEF233G

- For an intermittent malfunction, move harness or harness connector by hand to check poor contact or false open circuit.
- Always read “GI section” to confirm general precautions. Refer to GI-4, "General Precautions" .

A B C D E BRC G H I J K L M

DIAGNOSIS FLOW CHART

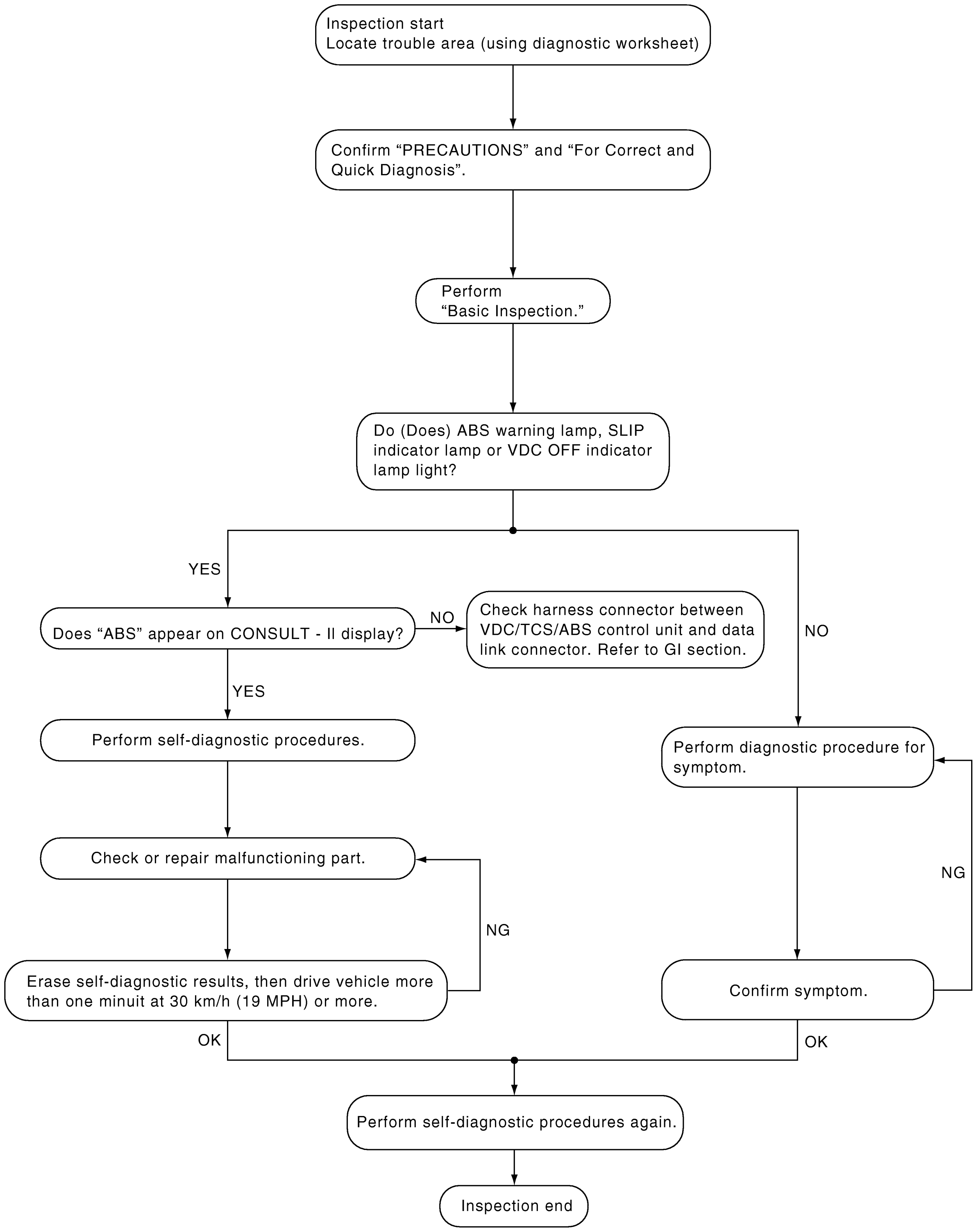

PFIA0700E

ASKING COMPLAINTS

- Complaints against malfunction vary depending on each person. It is important to clarify customer complaints.
- Ask customer about what symptoms are present and under what conditions. Use information to reproduce symptom while driving.
- It is also important to use diagnosis sheet so as not to miss information.

KEY POINTS

WHAT ..... Vehicle model
WHEN ..... Date, Frequencies
WHERE ..... Road conditions
HOW ..... Operating conditions, Weather conditions, Symptoms

SBR339B

EXAMPLE OF DIAGNOSIS SHEET

Customer name MR/MS	Model & Year		VIN
Engine #	Trans.		Mileage
Incident Date	Manuf. Date		In Service Date
Symptoms	☐ Noise and vibration (from engine compartment) ☐ Noise and vibration (from axle)	☐ Warning / Indicator activate	☐ Firm pedal operation Large stroke pedal operation
	☐ TCS does not work (Rear wheels slip when accelerating)	☐ ABS does not work. (wheels slip when braking)	☐ Lack of sense of acceleration
Engine conditions	☐ When starting ☐ After starting		
Road conditions	☐ Low friction road (☐Snow ☐Gravel ☐Other) ☐ Bumps / potholes		
Driving conditions	☐ Full-acceleration ☐ High speed cornering ☐ Vehicle speed: Greater than 10 km/h (6 MPH) ☐ Vehicle speed: 10 km/h (6 MPH) or less ☐ Vehicle is stopped		
Applying brake conditions	☐ Suddenly ☐ Gradually		
Other conditions	☐ Operation of electrical equipment ☐ Shift change ☐ Other descriptions		

SFIA0791E

Component Parts Location

AFS002O7

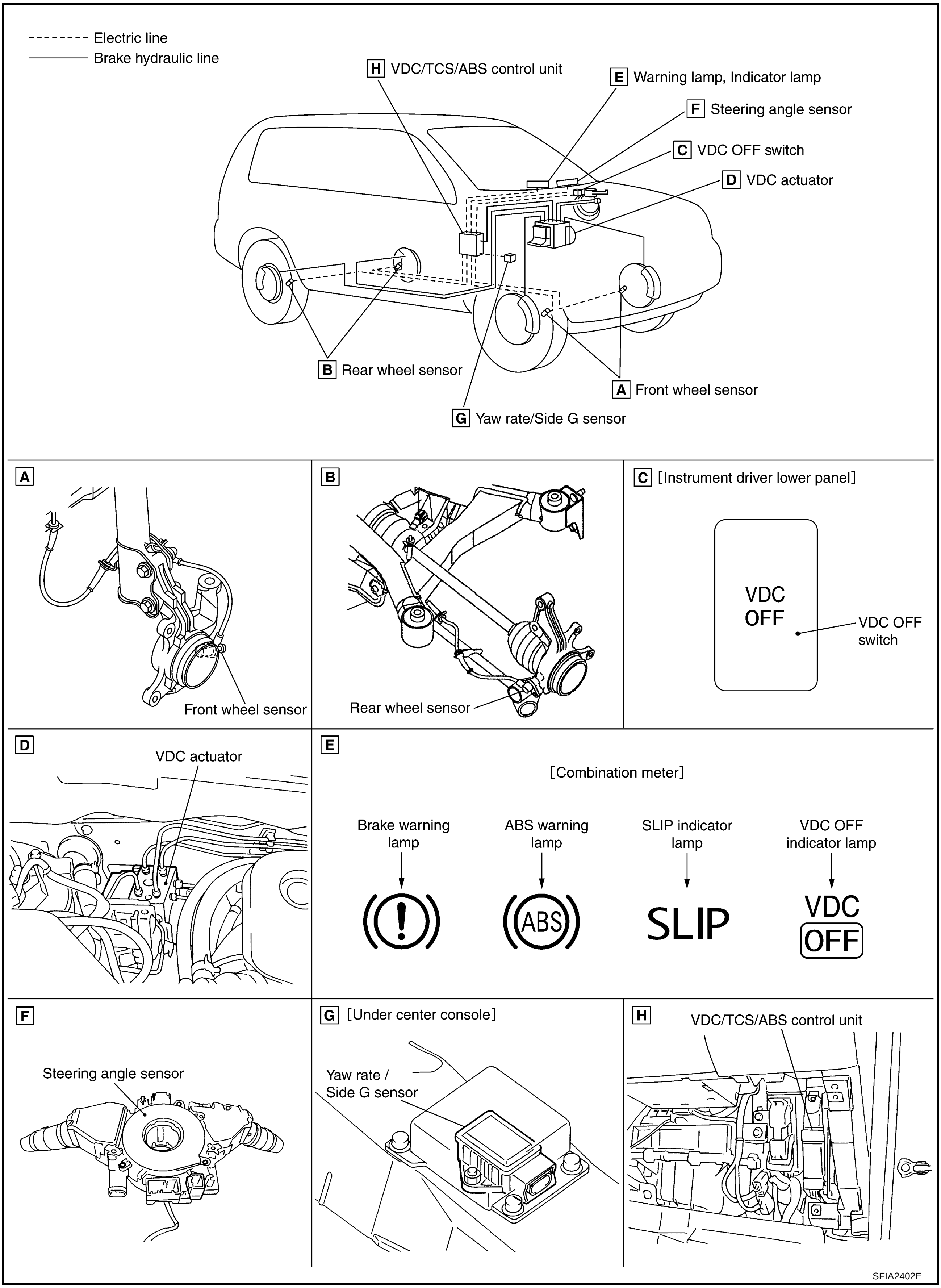

Schematic

AFS002O8

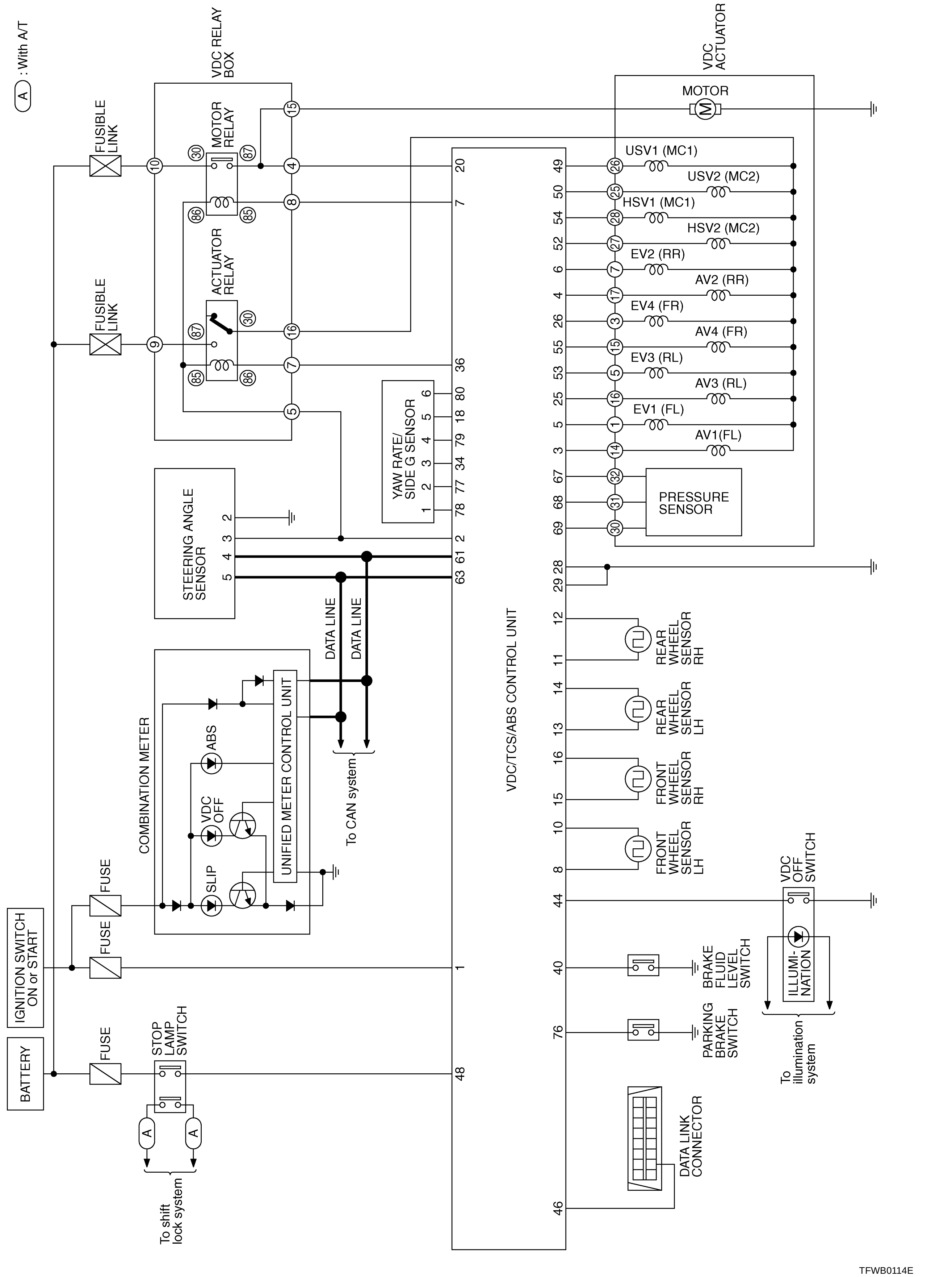

TFWB0114E

Wiring Diagram — VDC —

AFS002O9

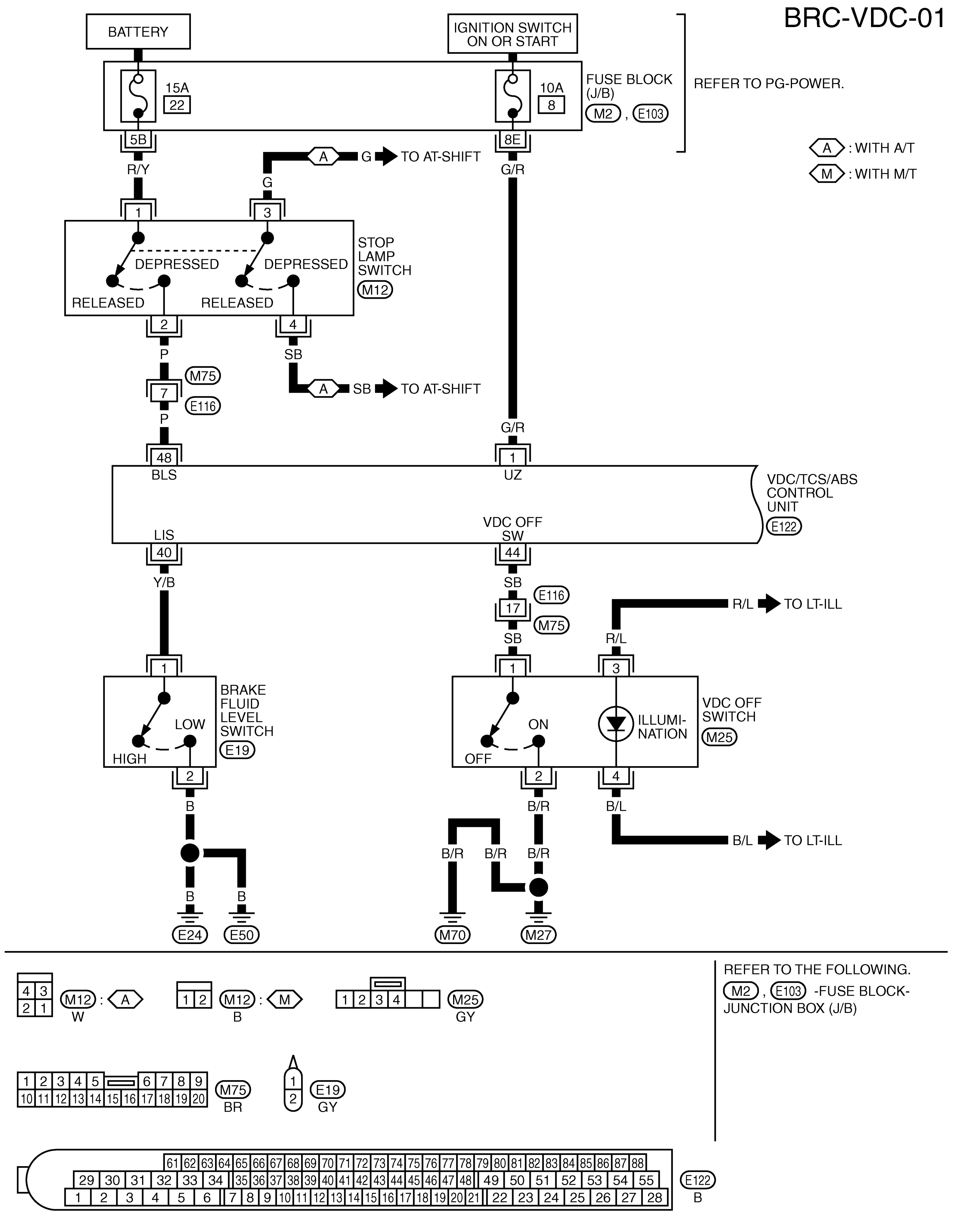

BRC-VDC-02

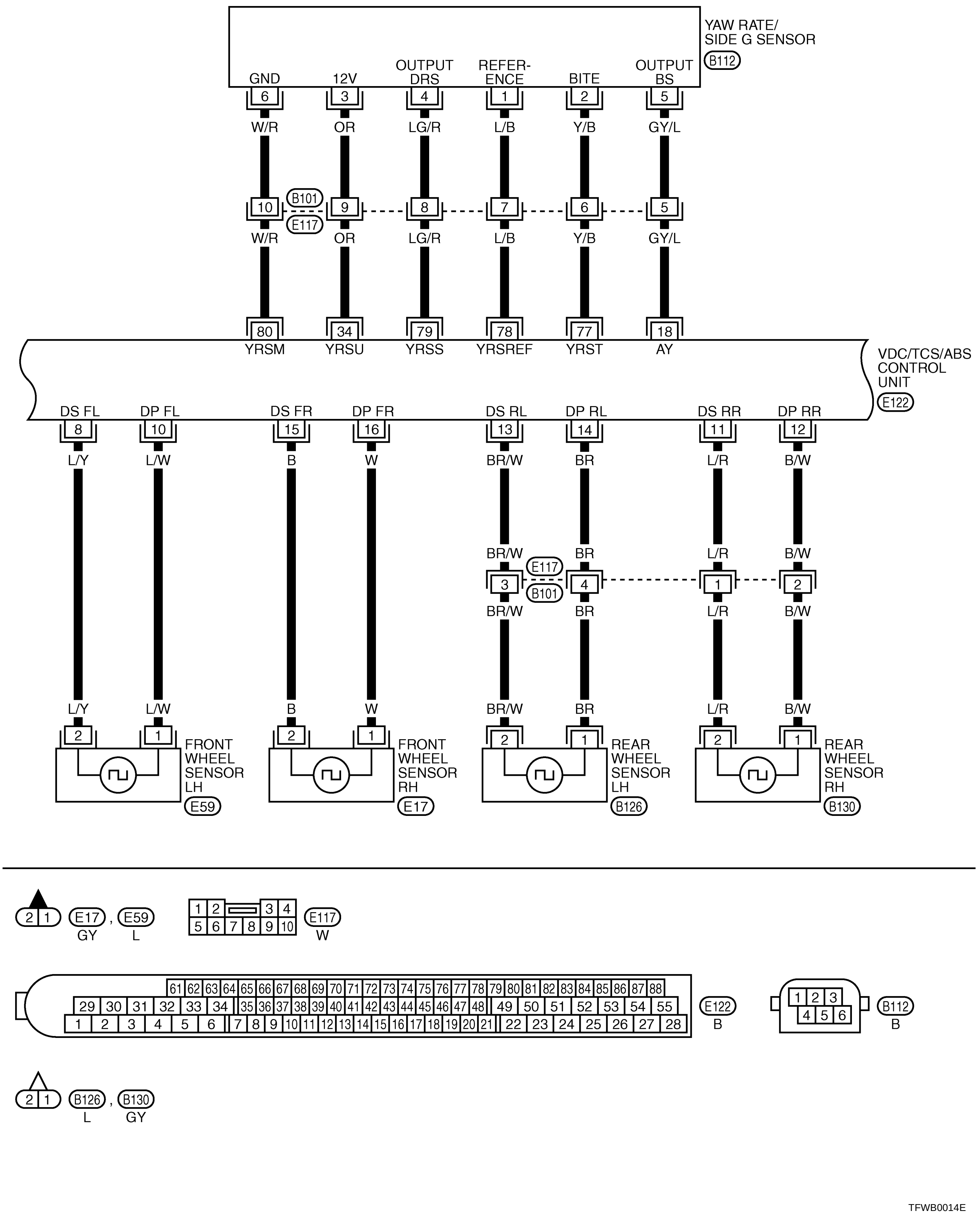
YAW RATE/
SIDE G SENSOR
B112
GND
12V
OUTPUT DRS
REFER-ENCE
BITE
OUTPUT BS
6 3 4 1 2 5
W/R OR LG/R L/B Y/B GY/L
B101
E117
10 9 8 7 6 5
80 34 79 78 77 18
YRSM YRSU YRSS YRSREF YRST AY
VDC/TCS/ABS
CONTROL
UNIT
E122
DS FL DP FL DS FR DP FR DS RL DP RL DS RR DP RR
8 10 15 16 13 14 11 12
L/Y L/W B W BR/W BR L/R B/W
FRONT WHEEL SENSOR LH
E59
FRONT WHEEL SENSOR RH
E17
REAR WHEEL SENSOR LH
B126
REAR WHEEL SENSOR RH
B130
E17 , E59
GY L
E117
W
E122
B
B112
B
B126 , B130
L GY
TFWB0014E

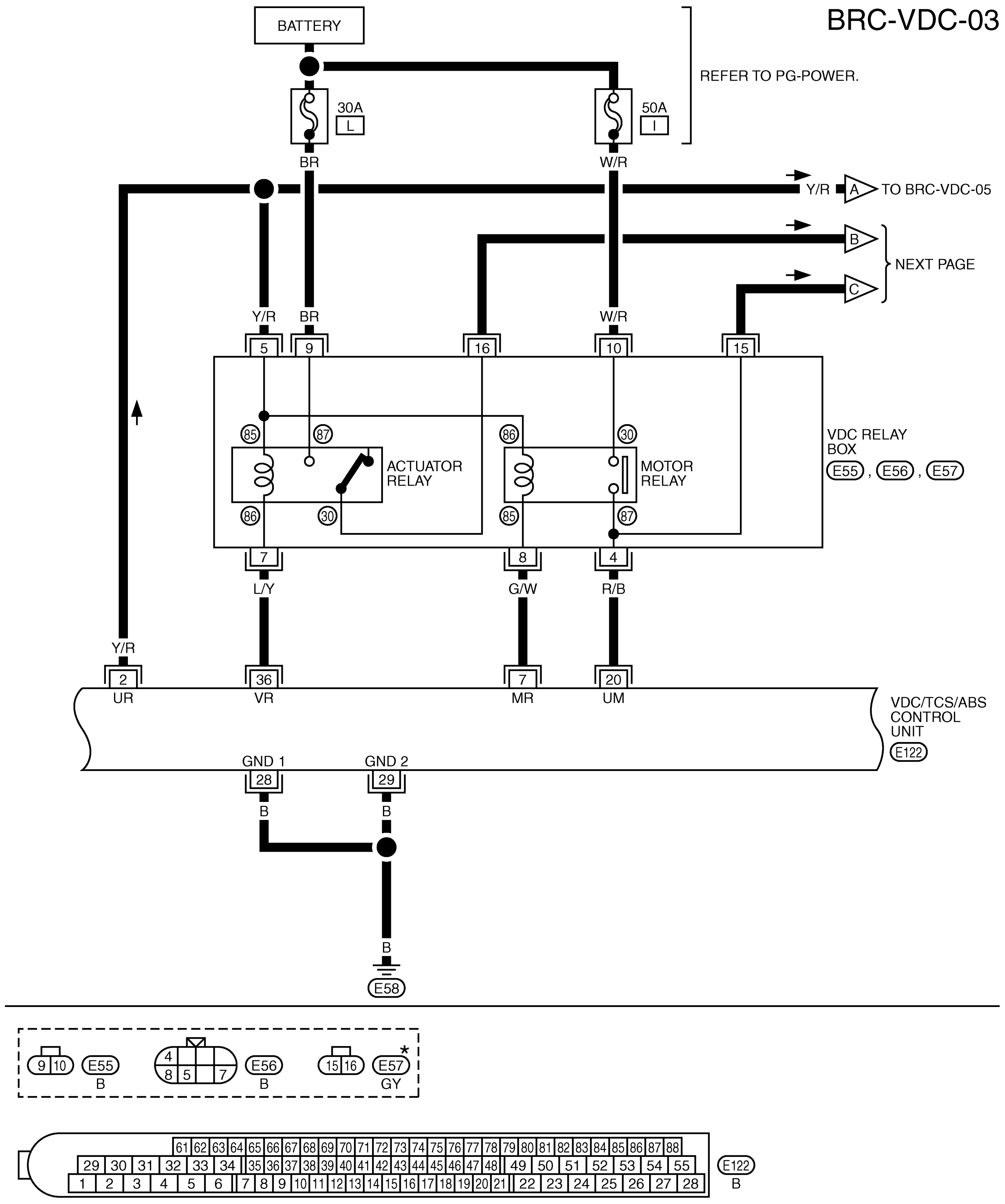

*: THIS CONNECTOR IS NOT SHOWN IN "HARNESS LAYOUT", PG SECTION.

TFWB0015E

BRC-VDC-04

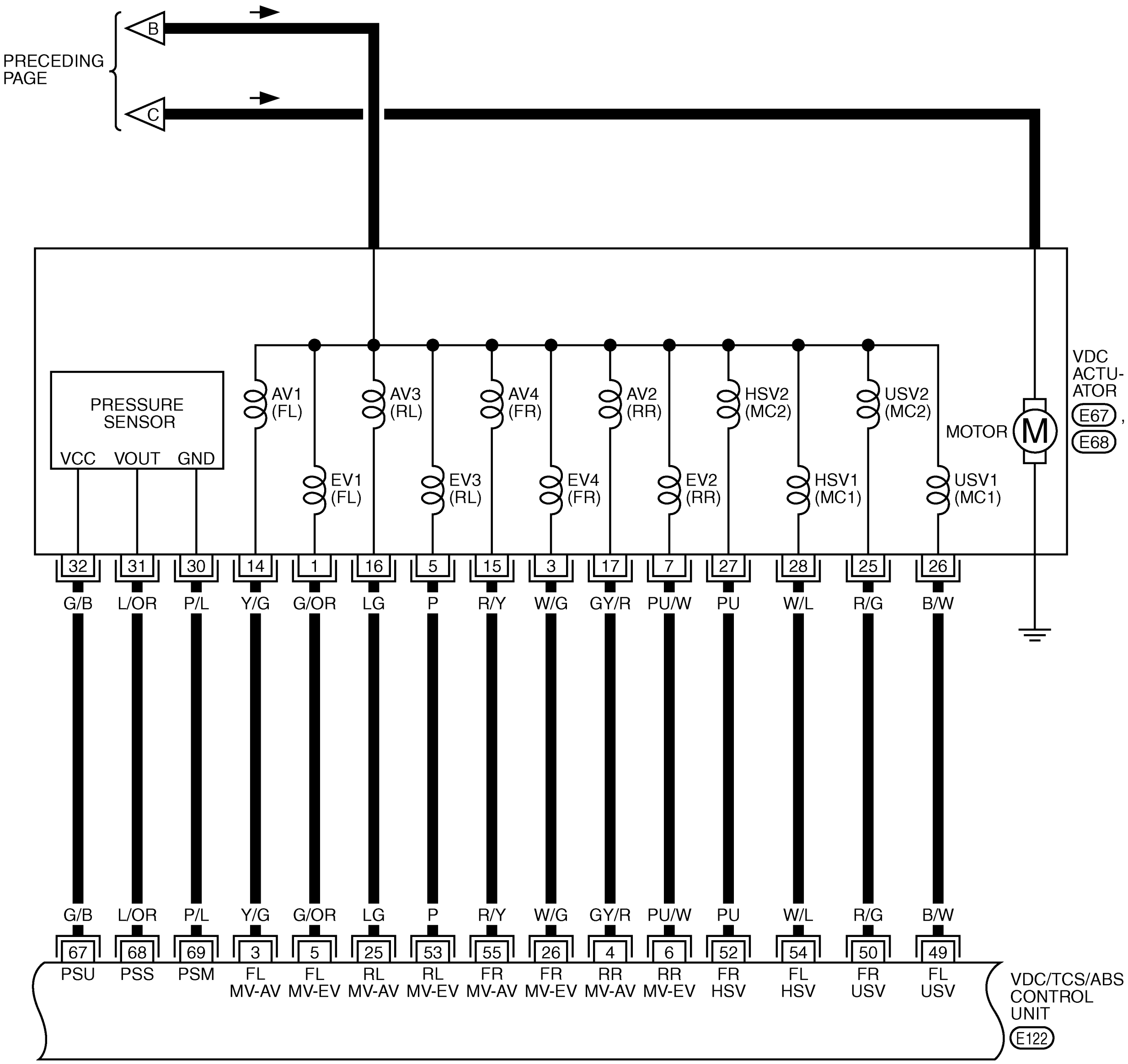

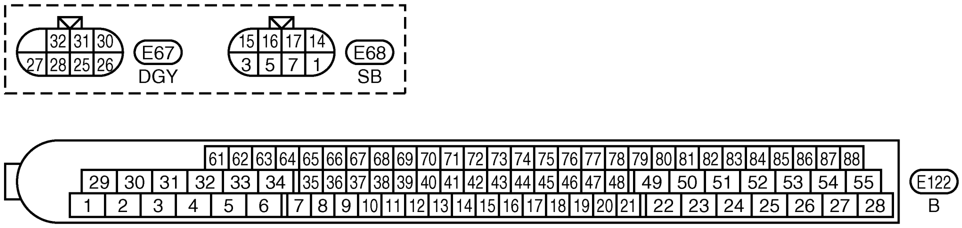

TFWB0016E

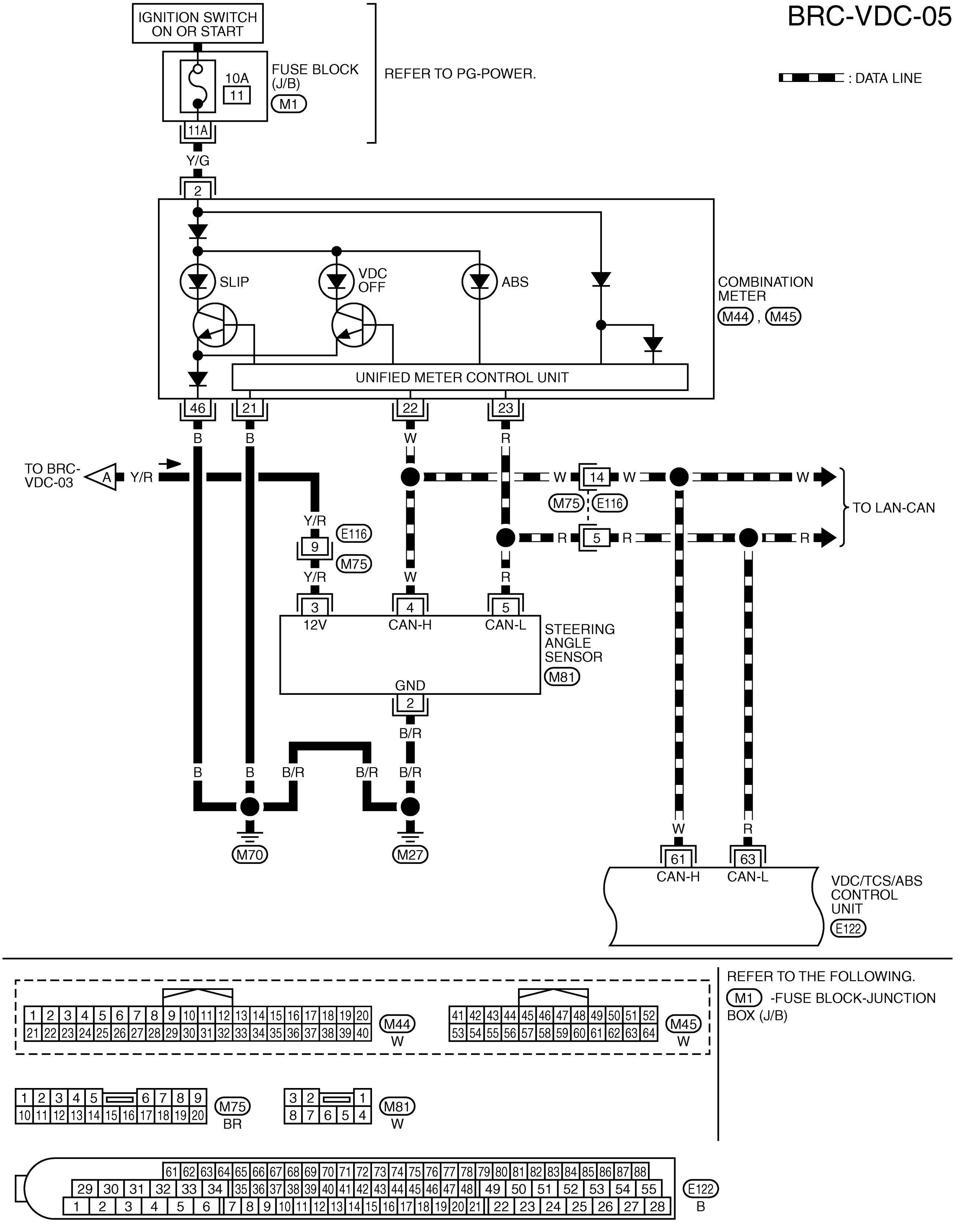
BRC-VDC-05
: DATA LINE
IGNITION SWITCH ON OR START
FUSE BLOCK (J/B)
M1
10A
11
11A
REFER TO PG-POWER.
Y/G
2
SLIP
VDC OFF
ABS
COMBINATION METER
M44, M45
UNIFIED METER CONTROL UNIT
46
21
22
23
B
W
R
TO BRC-VDC-03
A
Y/R
14
5
M75
E116
9
TO LAN-CAN
3
4
12V
CAN-H
CAN-L
STEERING ANGLE SENSOR
M81
GND
B/R
M70
M27
61
63
VDC/TCS/ABS CONTROL UNIT
E122
REFER TO THE FOLLOWING.
M1 -FUSE BLOCK-JUNCTION BOX (J/B)
M44 W
M45 W
M75 BR
M81 W
E122 B
TFWB0116E

BRC-VDC-06

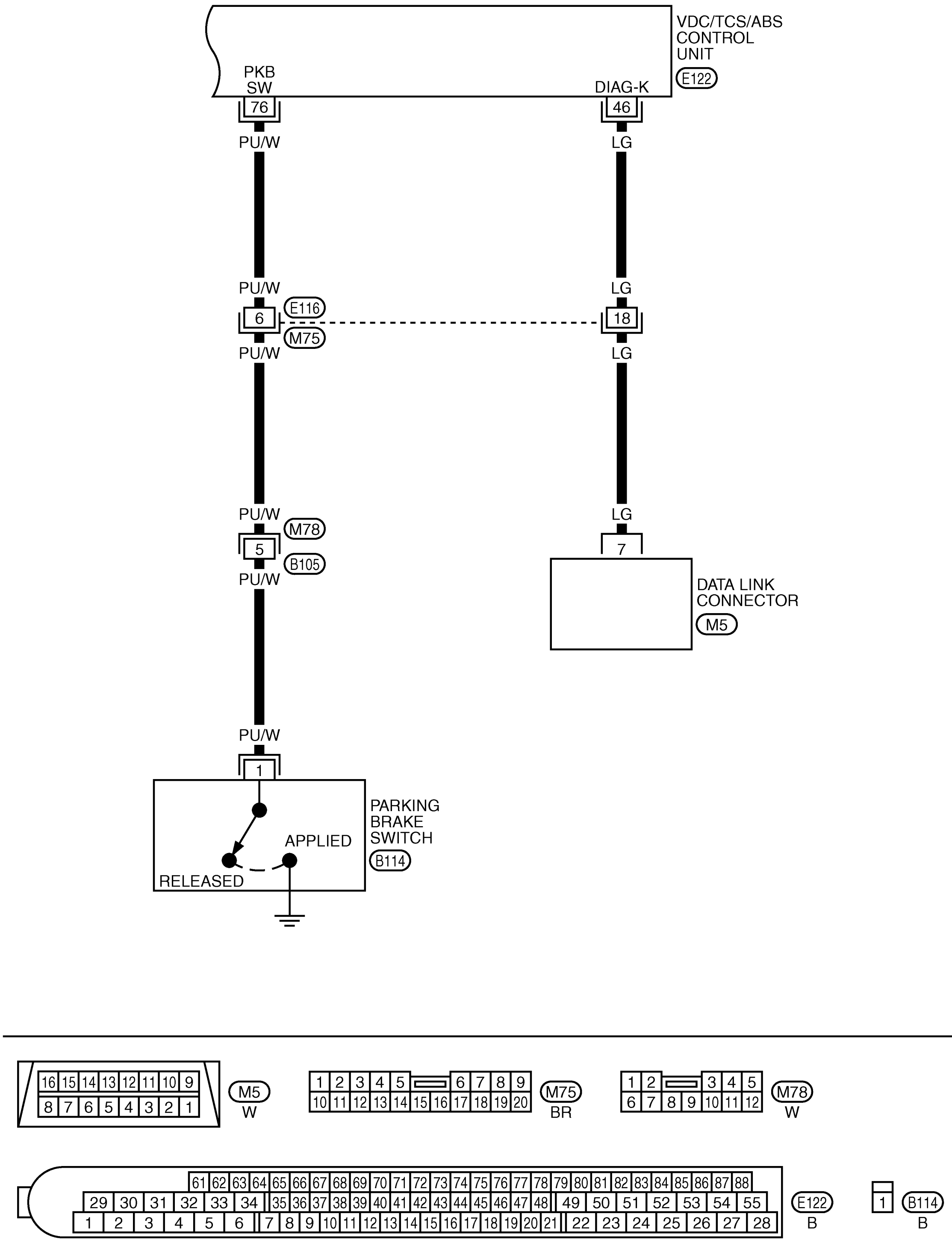

TFWB0018E

Control Unit Input/Output Signal Standard

AFS002OA

REFERENCE VALUE FROM CONSULT-II

CAUTION:

The displayed item is the data calculated by the control unit, so it may indicate a normal value even if an output circuit (harness) is open or shorted.

Data monitor item	Display item	Data monitor		Reference: Inspect item
		Condition	Reference values in normal operation	
FR LH SENSOR FR RH SENSOR RR LH SENSOR RR RH SENSOR	Wheel speed calculated using signals from all four wheel sensors	Vehicle stopped	0 [km/h]	BRC-71, "Wheel Sensor"
		Vehicle running (Note 1)	Nearly matches the speedometer display (± 10% or less)	
FR LH IN SOL FR LH OUT SOL FR RH IN SOL FR RH OUT SOL RR LH IN SOL RR LH OUT SOL RR RH IN SOL RR RH OUT SOL	Operation status of all solenoid valve	Actuator (solenoid valve) is active (“Active Test ”with CONSULT-II) or actuator relay is inactive (in fail-safe mode).	ON	BRC-77, "Solenoid and VDC Switching Valve"
		When the actuator (solenoid valve) is not active and actuator relay is active (ignition switch ON).	OFF	
STOP LAMP SW	Brake pedal operation status	Brake pedal depressed	ON	BRC-81, "Stop Lamp Switch Circuit"
		Brake pedal not depressed	OFF	
MOTOR RELAY	Motor and motor relay operation status	When the motor relay and motor are operating	ON	BRC-79, "Actuator Motor and Motor Relay"
		When the motor relay and motor are not operating	OFF	
ACTUATOR RELAY	Actuator relay operation status	When the actuator relay is operating	ON	BRC-80, "Actuator Relay"
		When the actuator relay is not operating	OFF	
PARK BRAKE SW	Parking brake status	Parking brake activated	ON	BRC-86, "PARKING BRAKE SWITCH"
		Parking brake not activated	OFF	
ABS WARN LAMP	ABS warning lamp status (Note 2)	When ABS warning lamp is ON.	ON	BRC-69, "ABS WARNING LAMP, BRAKE WARNING LAMP, VDC OFF INDICATOR LAMP, AND SLIP INDICATOR LAMP"
		When ABS warning lamp is OFF.	OFF	
OFF LAMP	VDC OFF indicator lamp status (Note 3)	When VDC OFF indicator lamp is ON.	ON	
		When VDC OFF indicator lamp is OFF.	OFF	
OFF SW	VDC OFF SW ON/OFF condition	VDC OFF switch ON (When VDC OFF indicator lamp is ON.)	ON	BRC-85, "VDC OFF SWITCH"
		VDC OFF switch OFF (When VDC OFF indicator lamp is OFF.)	OFF	

Data monitor item	Display item	Data monitor		Reference: Inspect item
		Condition	Reference values in normal operation	
SLIP LAMP	SLIP indicator lamp status (Note 4)	When SLIP indicator lamp is ON	ON	BRC-91, "Slip Indicator Lamp Indication Is Not Normal"
		When SLIP indicator lamp is OFF.	OFF	
BATTERY VOLT	Battery voltage supplied to the VDC/TCS/ABS control unit	Ignition switch ON	10 – 16 V	BRC-82, "VDC/TCS/ ABS Control Unit Power And Ground"
GEAR (Only A/T models)	A/T gear position	1st gear 2nd gear 3rd gear 4th gear 5th gear	1 2 3 4 5	—
SLCT LVR POSI (Only A/T models)	A/T shift position	P position R position N position D position	P R N D	BRC-83, "Park/Neutral Position (PNP) Switch (Only A/T Models)"
YAW RATE SEN	Yaw rate detected by yaw rate sensor	Vehicle stopped	Approx. 0 d/s	BRC-76, "Yaw Rate/ Side G Sensor"
		During driving	– 70 to 70 d/s	
ACCEL POS SIG	Open/close condition of throttle valve (linked with accelerator pedal)	Accelerator pedal not depressed (ignition switch is ON)	0%	Control unit communication circuit between the VDC/TCS/ABS control unit and ECM
		Accelerator pedal depressed (ignition switch is ON)	0 – 100%	
SIDE G SENSOR	Transverse acceleration detected by side G sensor	Vehicle stopped	Approx. 0 m/s^2	BRC-76, "Yaw Rate/ Side G Sensor"
		During driving	– 24.3 to 24.1 m/s^2	
STR ANGLE SIG	Steering wheel angle detected by steering angle sensor	Straight-ahead condition	Approx. 0 °	BRC-74, "Steering Angle Sensor"
		Steering	– 720 to 720°	
ENG RPM	With the engine running	With the engine stopped	0 rpm	Engine speed signal circuit
		Engine running	Almost in accordance with tachometer display	
PRESS SENSOR	Brake fluid pressure detected by pressure sensor	With the ignition switch turned ON and brake pedal released.	Approx. 0 bar	BRC-73, "Pressure Sensor"
		With the ignition switch turned ON and brake pedal depressed.	– 40 to 300 bar	
EBD FAIL SIG ABS FAIL SIG TCS FAIL SIG VDC FAIL SIG	System fail signal status	Malfunctions condition (When system failed)	OFF	EBD system ABS system TCS system VDC system
ASCD SIGNAL	ASCD operation condition	ASCD activated	ON	ASCD and circuit
		ASCD not activated	OFF	
FLUID LEV SW	Brake fluid level switch status.	When brake fluid level switch is ON.	ON	BRC-84, "Brake Fluid Level Switch"
		When brake fluid level switch is OFF.	OFF	

Data monitor item	Display item	Data monitor		Reference: Inspect item
		Condition	Reference values in normal operation	
USV [FR-PL] USV [FL-RR] HSV [FR-RL] HSV [FL-RR]	VDC switch-over solenoid valve status	When the actuator (switch-over solenoid valve) is active.	ON	BRC-77, "Solenoid and VDC Switching Valve"
		When the actuator (switch-over solenoid valve) is inactive.	OFF	
V/R OUTPUT	Actuator relay activated (ON/OFF)	When the actuator relay is active.	ON	BRC-80, "Actuator Relay"
		When the actuator relay is not active (before the engine get started and in the fail-safe mode).	OFF	
M/R OUTPUT	Actuator motor and motor relay status (ON/OFF)	When the actuator motor and motor relay are active.	ON	BRC-79, "Actuator Motor and Motor Relay"
		When the actuator motor and motor relay are inactive.	OFF	

Note 1: Confirm tire pressure is the standard value.
Note 2: ON/OFF timing of the ABS warning lamp
ON: When the ignition switch is turned ON, or when a malfunction is detected.
OFF: After the ignition switch is turned ON (when the system is in normal operation).
Note 3: ON/OFF timing of the VDC OFF indicator lamp
ON: When the ignition switch is turned ON, or when a malfunction is detected VDC OFF switch is ON.
OFF: After the ignition switch is turned ON (when the system is in normal operation) or when VDC OFF switch is OFF.
Note 4: ON/OFF timing of the SLIP indicator lamp
ON: When the ignition switch is turned ON, or when a malfunction is detected.
OFF: After the ignition switch is turned ON (when the system is in normal operation) and VDC/TCS function is not activated.
Flashing: VDC/TCS function is active during driving.

CONSULT-II Functions (ABS)

AFS002OB

CONSULT-II MAIN FUNCTION

CONSULT-II can display each diagnostic item using the diagnostic test modes shown following.

Diagnostic test mode	Function	Reference
WORK SUPPORT	This mode enables a technician to adjust some devices faster and more accurately by following the indications on CONSULT-II.	BRC-43, "Adjustment of Steering Angle Sensor Neutral Position"
SELF-DIAGNOSTIC RESULTS	Self-diagnostic results can be read and erased quickly.	BRC-61, "Self-Diagnosis"
DATA MONITOR	Input/Output data in the VDC/TCS/ABS control unit can be read.	BRC-64, "Data Monitor"
CAN DIAG SUPPORT MNTR	The results of transmit / receive diagnostic of CAN communication can be read.	LAN-13, "CAN Diagnostic Support Monitor".
ACTIVE TEST	Diagnostic Test Mode in which CONSULT-II drives some actuators apart from the VDC/TCS/ABS control unit and also shifts some parameters in a specified range.	BRC-66, "Active Test"
FUNCTION TEST	This mode is used to inform customers when their vehicle condition requires periodic maintenance.	Separate volume “CONSULT-II OPERATION MANUAL (FUNCTION TEST)”
ECU PART NUMBER	VDC/TCS/ABS control unit part number can be read.	—

CONSULT-II BASIC OPERATION PROCEDURE

1. Touch ”ABS” in the “SELECT SYSTEM” screen.

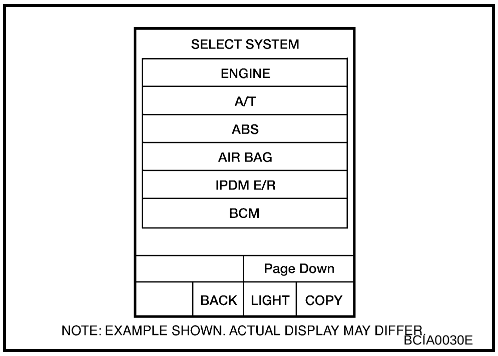

2. Select the required diagnostic location from the “SELECT DIAG MODE” screen.

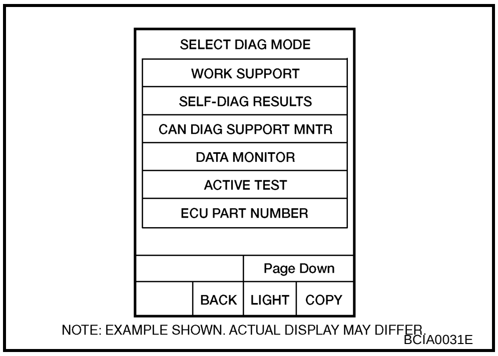

SELF-DIAGNOSIS

OPERATION PROCEDURE

1. Turn ignition switch OFF.
2. Connect CONSULT-II and CONSULT-II CONVERTER to data link connector.
3. Turn ignition switch ON.
4. Start engine and drive vehicle at 30 km/h (19 MPH) or more for approximately 1 minute.
5. After stopping vehicle, with the engine running, touch “START (NISSAN BASED VHCL)”, “ABS”, “SELF-DIAG RESULTS” in order on the CONSULT-II screen.
   If “ABS” is not indicated, go to GI-38, "CONSULT-II Data Link Connector (DLC) Circuit" .
6. The self-diagnostic results are displayed. (Touch “PRINT” to print out self-diagnostic results, if necessary.)
   - Check ABS warning lamp, VDC OFF indicator lamp and SLIP indicator lamp If “NO FAILURE” is displayed.
7. Perform the appropriate inspection from the display item list, and repair or replace the malfunctioning component. Refer to BRC-62, "DISPLAY ITEM LIST" .
8. Start engine and drive vehicle at 30 km/h (19 MPH) or more for approximately 1 minute.
   CAUTION:
   When the wheel sensor malfunctions, after inspecting the wheel sensor system, the ABS warning lamp will not turn off even when the system is normal unless the vehicle is driving at approximately 30 km/h (19 MPH) or more for approximately 1 minute.

ERASE MEMORY

1. Turn ignition switch OFF.
2. Start engine and touch “START (NISSAN BASED VHCL)”, “ABS”, “SELF-DIAG RESULTS”, “ERASE MEMORY” in order on the CONSULT-II screen to erase the error memory.
   If “ABS” is not indicated, go to GI-38, "CONSULT-II Data Link Connector (DLC) Circuit" .
   CAUTION:
   If the error memory is not erased, re-perform the operation from step 4.
3. Perform self-diagnosis again, and make sure that diagnostic memory is erased.
4. Drive vehicle at 30 km/h (19 MPH) or more for approximately 1 minute as the final inspection, and make sure that the ABS warning lamp, VDC OFF indicator lamp, and SLIP indicator lamp turn off.
   CAUTION:
   VDC OFF switch should not stay in the “ON” position.

DISPLAY ITEM LIST

Code	Diagnostic item	Malfunction is detected when...	Check circuit
C1101	RR RH SENSOR – 1	Circuit of rear RH wheel sensor is open.	BRC-71, "Wheel Sensor" (Note 1)
C1102	RR LH SENSOR – 1	Circuit of rear LH wheel sensor is open.	
C1103	FR RH SENSOR – 1	Circuit of front RH wheel sensor is open.	
C1104	FR LH SENSOR – 1	Circuit of front LH wheel sensor is open.	
C1105	RR RH SENSOR – 2	When the circuit in the rear RH wheel sensor is short-circuited. Or when the sensor power voltage is outside the standard. When the distance between the wheel sensor and sensor rotor is too large and the sensor pulse cannot be recognized by the control unit.	
C1106	RR LH SENSOR – 2	When the circuit in the rear LH wheel sensor is short-circuited. Or when the sensor power voltage is outside the standard. When the distance between the wheel sensor and sensor rotor is too large and the sensor pulse cannot be recognized by the control unit.	
C1107	FR RH SENSOR – 2	When the circuit in the front RH wheel sensor is short-circuited. Or when the sensor power voltage is outside the standard. When the distance between the wheel sensor and sensor rotor is too large and the sensor pulse cannot be recognized by the control unit.	
C1108	FR LH SENSOR – 2	When the circuit in the front LH wheel sensor is short-circuited. Or when the sensor power voltage is outside the standard. When the distance between the wheel sensor and sensor rotor is too large and the sensor pulse cannot be recognized by the control unit.	
C1109	BATTERY VOLTAGE [ABNORMAL]	When the VDC/TCS/ABS control unit power voltage is lower than normal.	BRC-82, "VDC/ TCS/ABS Control Unit Power And Ground"
C1110	CONTROLLER FAILURE	When there is an internal error in the VDC/TCS/ABS control unit.	BRC-73, "VDC/ TCS/ABS Control Unit"
C1111	PUMP MOTOR ACTUATOR RLY (Note 2)	During the actuator motor operating with ON, when the actuator motor turns OFF, or when the control line for actuator motor relay is open.	BRC-79, "Actuator Motor and Motor Relay"
		During the actuator motor operating with OFF, when the actuator motor turns ON, or when the control line for relay is shorted to ground.	
C1114	MAIN RELAY	During the actuator relay operating with OFF, when the actuator relay turns ON. Or when the control line for the relay is shorted to the ground.	BRC-80, "Actuator Relay"
		During the actuator relay operating with ON, when the actuator relay turns OFF, or when the control line for the relay is open.	
C1115	ABS SENSOR [ABNORMAL SIGNAL]	Wheel sensor input signal is irregular.	BRC-71, "Wheel Sensor"
C1116	STOP LAMP SW	Stop lamp switch circuit is open.	BRC-81, "Stop Lamp Switch Circuit"

Code	Diagnostic item	Malfunction is detected when...	Check circuit
C1120	FR LH IN ABS SOL	When the control unit detects a malfunction in the front left inlet solenoid circuit.	BRC-77, "Solenoid and VDC Switching Valve"
C1121	FR LH OUT ABS SOL	When the control unit detects a malfunction in the front left outlet solenoid circuit.	
C1122	FR RH IN ABS SOL	When the control unit detects a malfunction in the front right inlet solenoid circuit.	
C1123	FR RH OUT ABS SOL	When the control unit detects a malfunction in the front right outlet solenoid circuit.	
C1124	RR LH IN ABS SOL	When the control unit detects a malfunction in the rear left inlet solenoid circuit.	
C1125	RR LH OUT ABS SOL	When the control unit detects a malfunction in the rear left outlet solenoid circuit.	
C1126	RR RH IN ABS SOL	When the control unit detects a malfunction in the rear right inlet solenoid circuit.	
C1127	RR RH OUT ABS SOL	When the control unit detects a malfunction in the rear right outlet solenoid circuit.	
C1130	ENGINE SIGNAL 1	Major engine components are malfunctioning	BRC-73, "Engine System"
C1131	ENGINE SIGNAL 2		
C1132	ENGINE SIGNAL 3		
C1133	ENGINE SIGNAL 4		
C1136	ENGINE SIGNAL 6		
C1142	PRESS SEN CIRCUIT	Pressure sensor signal line is open or shorted, or pressure sensor is malfunctioning.	BRC-73, "Pressure Sensor"
C1143	ST ANGLE SEN CIRCUIT	Neutral position of steering angle sensor is dislocated, or the steering angle sensor is malfunctioning.	BRC-74, "Steering Angle Sensor"
C1144	ST ANGLE SEN SIGNAL	Neutral position correction of steering angle sensor is not finished.	BRC-43, "Adjustment of Steering Angle Sensor Neutral Position"
C1145	YAW RATE SENSOR	Yaw rate sensor is malfunctioning, or the yaw rate sensor signal line is open or shorted.	BRC-76, "Yaw Rate/Side G Sensor"
C1146	SIDE G-SEN CIRCUIT	Side G sensor is malfunctioning, or circuit of side G sensor is open or shorted.	BRC-76, "Yaw Rate/Side G Sensor"
C1147	USV LINE [FL-RR]	VDC switch-over solenoid valve 1 on the primary side is open circuit or shorted, or the control line is open or shorted to the power supply or the ground.	BRC-77, "Solenoid and VDC Switching Valve".
C1148	USV LINE [FR-RL]	VDC switch-over solenoid valve 1 on the secondary side is open circuit or shorted, or the control line is open or shorted to the power supply or the ground.	
C1149	HSV LINE [FL-RR]	VDC switch-over solenoid valve 2 on the primary side is open circuit or shorted, or the control line is open or shorted to the power supply or the ground.	
C1150	HSV LINE [FR-RL]	VDC switch-over solenoid valve 2 on the secondary side is open circuit or shorted, or the control line is open or shorted to the power supply or the ground.	
C1153	EMERGENCY BRAKE	VDC/TCS/ABS control unit malfunction (pressure increase is too much or too little.)	BRC-73, "VDC/TCS/ABS Control Unit"
C1154	PNP POS SIG (Only A/T model)	P position switch stuck to ON or TCM internal malfunction, VDC/TCS/ABS control unit internal malfunction.	BRC-83, "Park/Neutral Position (PNP) Switch (Only A/T Models)"

Code	Diagnostic item	Malfunction is detected when...	Check circuit
C1155	BR FLUID LEVEL LOW	Brake fluid level drops or communication line between the VDC/ TCS/ABS control unit and brake fluid level warning switch is open or shorted.	BRC-84, "Brake Fluid Level Switch"
C1156	ST ANG SEN COM CIR	CAN communication circuit or steering angle sensor is malfunctioning.	BRC-85, "CAN Communication"
U1000	CAN COMM CIRCUIT	● CAN communication circuit is open or shorted. ● VDC/TCS/ABS control unit internal malfunction. ● Battery voltage for ECM is interrupted instantaneously for Approx. 0.5 seconds or more.	BRC-85, "CAN Communication"(Note 3)

Note 1: After completing repairs of shorted sensor circuit, when ignition switch is turned ON, ABS warning lamp turns on. Make sure that ABS warning lamp turns off while driving vehicle at 30 km/h (19 MPH) or more for approximately 1 minute according to self-diagnosis procedure. In addition, if wheel sensor 2 is displayed for wheels, check wheel sensor circuit and also check control unit power voltage.
Note 2: ACTUATOR RLY" on the CONSULT-II self-diagnostic results indicates the malfunction of the actuator motor relay and circuit.
Note 3: When errors are detected in several systems, including CAN communication circuit [U1000], troubleshoot CAN communication circuit. Refer to BRC-85, "CAN Communication" .

DATA MONITOR

OPERATION PROCEDURE

1. Touch “START (NISSAN BASED VHCL)”, “ABS”, “DATA MONITOR” in order on the CONSULT-II screen. If “ABS” is not indicated, go to GI-38, "CONSULT-II Data Link Connector (DLC) Circuit" .
2. At the monitor item selection screen, touch one of the items “ECU INPUT SIGNALS”, “MAIN SIGNALS” or “SELECTION FROM MENU”.
3. Touch “START” to proceed to the data monitor screen.

DISPLAY ITEM LIST

×: Standard –: Not applicable

Data monitor item (Unit)	SELECT MONITOR ITEM			Remarks
	ECU INPUT SIGNALS	MAIN SIGNALS	SELECTION FROM MENU	
FR LH SENSOR [km/h]	×	×	×	Wheel speed calculated by front LH wheel sensor signal is displayed.
FR RH SENSOR [km/h]	×	×	×	Wheel speed calculated by front RH wheel sensor signal is displayed.
RR LH SENSOR [km/h]	×	×	×	Wheel speed calculated by rear LH wheel sensor signal is displayed.
RR RH SENSOR [km/h]	×	×	×	Wheel speed calculated by rear RH wheel sensor signal is displayed.
FR RH IN SOL (ON/OFF)	–	×	×	Front RH wheel inlet solenoid valve (ON/OFF) status is displayed.
FR RH OUT SOL (ON/OFF)	–	×	×	Front RH wheel outlet solenoid valve (ON/OFF) status is displayed.
FR LH IN SOL (ON/OFF)	–	×	×	Front LH wheel inlet solenoid valve (ON/OFF) status is displayed.
FR LH OUT SOL (ON/OFF)	–	×	×	Front LH wheel outlet solenoid valve (ON/OFF) status is displayed.
RR RH IN SOL (ON/OFF)	–	×	×	Rear RH wheel inlet solenoid valve (ON/OFF) status is displayed.
RR RH OUT SOL (ON/OFF)	–	×	×	Rear RH wheel outlet solenoid valve (ON/OFF) status is displayed.
RR LH IN SOL (ON/OFF)	–	×	×	Rear LH wheel inlet solenoid valve (ON/OFF) status is displayed.
RR LH OUT SOL (ON/OFF)	–	×	×	Rear LH wheel outlet solenoid valve (ON/OFF) status is displayed.

Data monitor item (Unit)	SELECT MONITOR ITEM			Remarks
	ECU INPUT SIGNALS	MAIN SIGNALS	SELECTION FROM MENU	
STOP LAMP SW (ON/OFF)	×	×	×	Stop lamp switch (ON/OFF) status is displayed.
MOTOR RELAY (ON/OFF)	–	×	×	ABS motor relay signal (ON/OFF) status is displayed.
ACTUATOR RLY (ON/OFF)	–	×	×	ABS actuator relay signal (ON/OFF) status is displayed.
ABS WARN LAMP (ON/OFF)	–	×	×	ABS warning lamp (ON/OFF) status is displayed.
OFF LAMP (ON/OFF)	–	×	×	VDC OFF indicator lamp (ON/OFF) status is displayed.
OFF SW (ON/OFF)	×	×	×	VDC OFF switch (ON/OFF) status is displayed.
SLIP LAMP (ON/OFF)	–	×	×	SLIP indicator lamp (ON/OFF) status is displayed.
BATTERY VOLT (V)	×	×	×	The voltage supplied to VDC/TCS/ABS control unit is displayed.
GEAR (Only A/T models)	×	×	×	The gear position determined from Park/Neutral position (PNP) switch signal is displayed.
YAW RATE SEN (d/s)	×	×	–	Yaw rate detected by the yaw rate sensor is displayed.
SLCT LVR POSI (Only A/T models)	×	×	×	Shift position determined from the Park/Neutral position (PNP) switch signal is displayed.
ACCEL POS SIG (%)	×	–	–	Throttle valve open/close status judged by the CAN communication signal is displayed.
SIDE G-SENSOR (m/s^2)	×	–	×	Transverse acceleration detected by the side G sensor is displayed.
STR ANGLE SIG (°)	×	–	×	Steering wheel angle detected by the steering angle sensor is displayed.
PRESS SENSOR (bar)	×	–	×	Brake fluid pressure detected by the pressure sensor is displayed.
ENGINE RPM (rpm)	×	–	×	Engine speed judged by the CAN communication signal is displayed.
SNOW MODE SW (ON/OFF)	–	–	×	“OFF” is displayed.
BST OPER SIG (ON/OFF)	–	–	×	“OFF” is displayed.
OD OFF SW (ON/OFF)	–	–	×	“OFF” is displayed.
EBD SIGNAL (ON/OFF)	–	–	×	EBD operation (ON/OFF) status is displayed.
ABS SIGNAL (ON/OFF)	–	–	×	ABS operation (ON/OFF) status is displayed.
TCS SIGNAL (ON/OFF)	–	–	×	TCS operation (ON/OFF) status is displayed.
VDC SIGNAL (ON/OFF)	–	–	×	VDC operation (ON/OFF) status is displayed.
CAN COM START (ON/OFF)	–	–	×	Communication status of CAN communication is displayed.

Data monitor item (Unit)	SELECT MONITOR ITEM			Remarks
	ECU INPUT SIGNALS	MAIN SIGNALS	SELECTION FROM MENU	
ASCD SIGNAL (ON/OFF)	–	–	×	ON/OFF status of the VDC/TCS operation signal to ASCD is displayed.
FLUID LEV SW (ON/OFF)	×	–	×	Brake fluid level warning switch (ON/OFF) status is displayed.
PARK BRAKE SW (ON/OFF)	×	–	×	Parking brake switch (ON/OFF) status is displayed.
V/R OUTPUT (ON/OFF)	–	–	×	Actuator relay activation signal (ON/OFF) status is displayed.
M/R OUTPUT (ON/OFF)	–	–	×	Motor relay activation signal (ON/OFF) status is displayed.
VDC FAIL SIG (ON/OFF)	–	–	×	VDC fail-safe signal (ON/OFF) status is displayed.
TCS FAIL SIG (ON/OFF)	–	–	×	TCS fail-safe signal (ON/OFF) status is displayed.
ABS FAIL SIG (ON/OFF)	–	–	×	ABS fail-safe signal (ON/OFF) status is displayed.
EBD FAIL SIG (ON/OFF)	–	–	×	EBD fail-safe signal (ON/OFF) status is displayed.

ACTIVE TEST

CAUTION:

- **Do not perform ACTIVE TEST while driving vehicle.**
- **Make sure to completely bleed air from the brake system.**
- **Active test cannot be performed when EBD, ABS, TCS or VDC operation is malfunction.**
- **ABS and brake warning lamps turn on during ACTIVE TEST.**

OPERATION PROCEDURE

1. Connect CONSULT-II and CONVERTER to data link connector and start engine.
2. Touch “START (NISSAN BASED VHCL)”, “ABS”, “ACTIVE TEST” in order on the CONSULT-II screen.
   If “ABS” is not indicated, go to GI-38, "CONSULT-II Data Link Connector (DLC) Circuit" .
3. The “ SELECT TEST ITEM” screen is displayed.
4. Touch necessary test item.

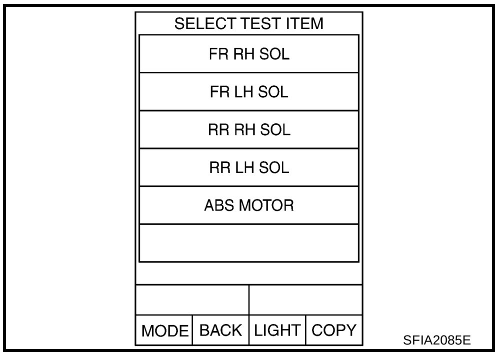

5. Touch “START” with “MAIN SIGNALS” line inverted.
6. ACTIVE TEST screen will be displayed, so perform the following test.
   - Solenoid valve
   - ABS motor

   NOTE:
   - When active test is performed while depressing pedal, pedal depression amount will change, but this is normal.
   - Approximately 10 seconds after operation has begun, “TEST STOP” will be displayed.
   - To perform a retest after “TEST STOP” is displayed, touch “BACK” and perform test from step 3.

SOLENOID VALVE

NOTE:

The example shown is for front right wheel. The procedure for the other wheels is the same as given below.

- When performing an active test of the ABS function, select the main item for each test item. In addition, when performing an active test of the VDC/TCS function, select the item menu for each test item.
- For ABS solenoid valve, touch “UP”, “KEEP”, “DOWN” on the display screen.
  For ABS solenoid valve (ACT), touch “UP”, “ACT UP”, “ACT KEEP” and confirm that solenoid valves (IN, OUT, USV, HSV) operate as shown in the table below.

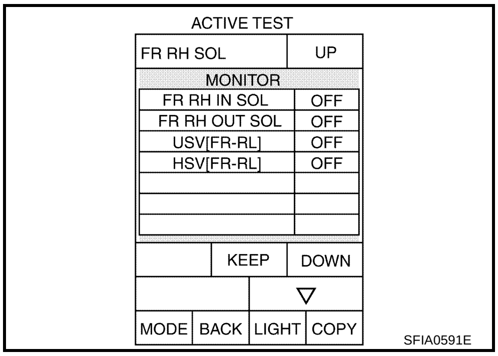

Solenoid Valve Operation Chart

Operation	ABS solenoid valve			ABS solenoid valve (ACT)		
	UP	KEEP	DOWN	UP	ACT UP	ACT KEEP
FR RH IN SOL	OFF	ON	ON	OFF	OFF	OFF
FR RH OUT SOL	OFF	OFF	ON*	OFF	OFF	OFF
USV [FR - RL]	OFF	OFF	OFF	OFF	ON	ON
HSV [FR - RL]	OFF	OFF	OFF	OFF	ON*	OFF

*: ON for 1 to 2 seconds after the touch, and then OFF

ABS MOTOR

Touch “ON”, “OFF” on the display screen and make sure ABS motor relay and ABS actuator relay are operating as given in the following table.

Operation	ON	OFF
MOTOR RELAY	ON	OFF
ACTUATOR RELAY	ON	ON

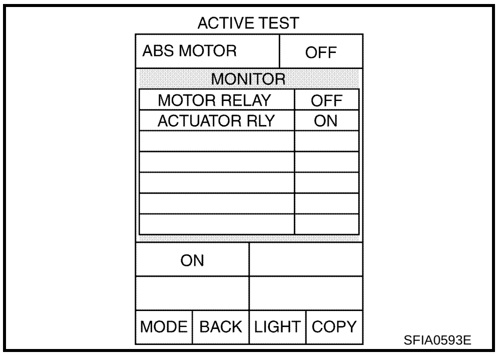

For Fast and Accurate Diagnosis

AFS002OC

PRECAUTIONS FOR DIAGNOSIS

- Before performing diagnosis, always read GI section to confirm general precautions.
- If VDC/TCS/ABS control unit, steering angle sensor, steering system parts, suspension system parts, or tires have been replaced, or if alignment has been adjusted, be sure to adjust neutral position of steering angle sensor before driving. Refer to BRC-43, "Adjustment of Steering Angle Sensor Neutral Position" .
- When replacing VDC/TCS/ABS control unit, be sure labels on control units are same color.
- After diagnosis is finished, be sure to erase memory. Refer to BRC-61, "ERASE MEMORY" .
- When checking continuity and voltage between units, be sure to check for disconnection, looseness, bend, or collapse of connector terminals. If any malfunction is found, repair or replace connector terminals.
- For intermittent symptoms, possible cause is malfunction in harness, harness connector, or terminals. Move harness, harness connector, and terminals to check for poor connections.
- If a circuit tester is used for the check, be careful not to forcibly extend any connector terminal.
- To use CONSULT-II to perform self-diagnosis of VDC/TCS/ABS control unit, active tests, or work support, first stop work, then connect CONSULT-II and CONSULT-II CONVERTER to data link connector and select “ABS”.
- CONSULT-II self-diagnostic results are displayed without regard to occurrence timing. In some cases later ones (timing value is small) appear on the next screen.
- While self-diagnostic results of CONSULT-II shows a malfunction, if CONSULT-II active test is performed, an engine system error may be indicated. In this case, start engine to resume normal screen.
- VDC/TCS/ABS system electronically controls brake operation and engine output. Following symptoms may be caused by normal operations:

Symptom	Symptom description	Result
Motor operation noise	This is noise of motor inside VDC actuator. Slight noise may occur during VDC, TCS, and ABS operation.	Normal
	Just after engine starts, motor operating noise may be heard. This is a normal status of the system operation check.	
System operation check noise	When the engine starts, slight “click” noise may be heard from engine room. This is normal and is part of system operation check.	Normal
TCS operation (SLIP indicator lamp ON)	TCS may activate momentarily if wheel speed changes when driving over location where friction coefficient varies, when downshifting, or when fully depressing accelerator pedal.	Normal Cancel VDC/TCS function for the inspection on a chassis dynamometer.
	When checking speed meter etc. with a 2-wheel-drive chassis dynamometer, vehicle speed is not increased by pressing down on the accelerator.	
ABS operation (Longer stopping distance)	When driving on roads with a low coefficient of friction, such as snowy roads or gravel roads, the stopping distance is sometimes longer for vehicles equipped with ABS. Therefore, when driving on such roads, drive at a sufficiently reduced speed to be safe.	Normal
Insufficient feeling of acceleration	Depending on road conditions, driver may feel that feeling of acceleration is insufficient. This is because traction control, which controls engine and brakes to achieve optimal traction, has the highest priority (for safety). As a result, there may be times when acceleration is slightly less than usual for the same accelerator pedal operation.	Normal

ON and OFF Timing for ABS Warning Lamp, VDC OFF Indicator Lamp, SLIP Indicator Lamp and Brake warning lamp.

×: ON –: OFF

Condition	ABS warning lamp	VDC OFF indicator lamp	SLIP indicator lamp	Brake warning lamp [Note1]
Ignition SW OFF	–	–	–	–
When ignition SW is turned ON	×	×	×	× [Note 2]

Condition	ABS warning lamp	VDC OFF indicator lamp	SLIP indicator lamp	Brake warning lamp [Note1]
After ignition switch is turned ON. (When system is normal.)	–	–	–	× [Note 2]
VDC OFF switch turned ON. (VDC function is OFF.)	–	×	–	–
VDC/TCS/ABS error.	×	×	×	–
When VDC/TCS is not functioning normally.	–	×	×	–
EBD error.	×	×	×	–

NOTE:
1. Brake warning lamp will turn on in case of operating parking brake (switch turned ON) or of actuating brake fluid level switch (brake fluid is insufficient).
2. After starting engine, brake warning lamp is turned off.

Basic Inspection

AFS002PC

BRAKE FLUID LEVEL, LEAKAGE AND BRAKE PAD

1. Check fluid level in the brake fluid reservoir tank. Refill the brake fluid if fluid level is low.
2. Check the area around the brake piping and VDC actuator for leakage. If leakage or oozing is detected, check as follows:
   - If VDC actuator connections are loose, tighten piping to the specified torque. Check again for leakage, and make sure that there is no fluid leakage.
   - If the flare nuts at the connections and the threads of the VDC actuator are damaged, replace the damaged parts. Then check again for leakage, and make sure that there is no fluid leak.
   - If leakage or oozing is detected on parts other than VDC actuator connections, wipe with a clean cloth and check again. If there is still leakage or oozing, replace the damaged part.
   - If leakage or oozing is detected on VDC actuator body, wipe with a clean cloth and check again. If there is still leakage or oozing, replace VDC actuator.

   CAUTION:
   VDC actuator cannot be disassembled.
3. Check brake disc rotor and pads. Front disc rotor: BR-30, "DISC ROTOR INSPECTION" , Front pad: BR-25, "PAD WEAR INSPECTION" , Rear disk rotor: BR-35, "DISC ROTOR INSPECTION" , Rear pad: BR-31, "PAD WEAR INSPECTION" .

POWER SUPPLY CIRCUIT TERMINAL LOOSENESS AND BATTERY

Check battery for looseness on the battery positive/negative terminal and ground connection. Also make sure that battery voltage does not drop.

ABS WARNING LAMP, BRAKE WARNING LAMP, VDC OFF INDICATOR LAMP, AND SLIP INDICATOR LAMP

1. Make sure that when the ignition switch is turned ON, the ABS warning lamp, VDC OFF indicator lamp (when VDC OFF switch is off), and SLIP indicator lamp turn on, and that the brake warning lamp turns on. If they do not turn on, perform CAN communication circuit diagnosis. Refer to BRC-85, "CAN Communication" . Be sure to check VDC OFF switch before checking VDC OFF indicator lamp. Refer to BRC-85, "VDC OFF SWITCH" . Check VDC OFF indicator lamp if there is no malfunction in CAN communication circuit and VDC OFF switch. Refer toBRC-92, "VDC OFF Indicator Lamp Indication Is Not Normal" .
2. Check if the ABS warning lamp, VDC OFF indicator lamp, and SLIP indicator lamp turn off after the ignition switch is turned ON, and if the brake warning lamp turns off after the engine is started. If they do not turn off, perform self-diagnosis.
3. With the engine running, make sure that the VDC OFF indicator lamp turns on and off when the VDC OFF switch turns ON and OFF. If it does not operate in accordance with the switch, check the VDC OFF switch system. Refer to BRC-85, "VDC OFF SWITCH" .
4. Perform self-diagnosis of VDC actuator if ABS warning lamp, VDC OFF indicator lamp, and SLIP indicator lamp do not turn off 10 seconds after engine is started.

5. Always erase self-diagnostic results after completing self-diagnosis. Refer to BRC-61, "ERASE MEMORY" .

   NOTE:
   Brake warning lamp turns on during parking brake operation (when switch is ON) and brake fluid level switch operation (insufficient brake fluid).

TROUBLE DIAGNOSIS FOR SYSTEM

PFP:00000

Wheel Sensor

AFS002OE

INSPECTION PROCEDURE

Check each part according to CONSULT-II self-diagnostic results, and then identify the parts to be replaced.

CAUTION:

Do not check between wheel sensor terminals.

1. CHECK TIRES

Check air pressure, wear and size.

Are air pressure, wear and size within standard?

YES >> GO TO 2.
NO >> Adjust air pressure, or replace tire.

2. CHECK SENSOR AND SENSOR ROTOR

- Check sensor rotor for damage.
- Check wheel sensor for damage, disconnection or looseness. Refer to BRC-93, "WHEEL SENSORS" , BRC-94, "SENSOR ROTOR" .

OK or NG

OK >> GO TO 3.
NG >> Repair wheel sensor mount or replace sensor rotor.

3. CHECK SELF-DIAGNOSTIC RESULTS

Check the self-diagnostic results.

Self-diagnostic results
FR RH SENSOR-1, -2
FR LH SENSOR-1, -2
RR RH SENSOR-1, -2
RR LH SENSOR-1, -2

Is above displayed on self-diagnosis display?

YES >> GO TO 4.
NO >> INSPECTION END

4. CHECK CONNECTOR

1. Turn ignition switch OFF and disconnect VDC/TCS/ABS control unit connector and malfunctioning wheel sensor connector. Check terminal to see if it is deformed, disconnected, loose, etc., and repair or replace it if any malfunction condition is found.
2. Reconnect connectors, drive vehicle at 30 km/h (19 MPH) or more for approximately 1 minute, and then perform self-diagnosis.

Is the result of self-diagnosis normal?

YES >> Connector terminal contact is loose, damaged, open or shorted.
NO >> GO TO 5.

5. CHECK WHEEL SENSOR HARNESS

1. Turn ignition switch OFF and disconnect malfunctioning wheel sensor connector and VDC/TCS/ABS control unit connector.
2. Check continuity between terminals. (Also check continuity when the steering wheel is turned right and left and when the sensor harness inside the wheel house is moved.)

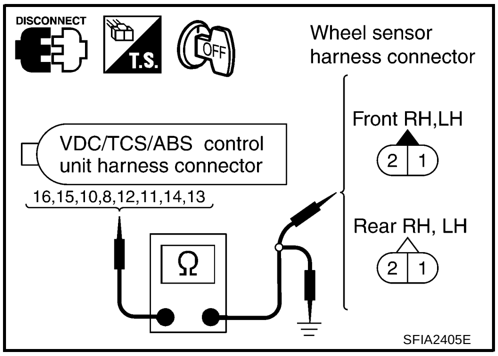

	Power supply circuit		Signal circuit		Ground circuit	
Wheel	VDC/TCS/ABS control unit (harness connector E122)	Wheel sensor (harness connector)	VDC/TCS/ABS control unit (harness connector E122)	Wheel sensor (harness connector)	VDC/TCS/ABS control unit (signal) (harness connector E122)	Ground
Front RH (E17)	16	1	15	2	16, 15	—
Front LH (E59)	10	1	8	2	10, 8	
Rear RH (B130)	12	1	11	2	12, 11	
Rear LH (B126)	14	1	13	2	14, 13	

Power supply circuit : Continuity should exist.
Signal circuit : Continuity should exist.
Ground circuit : Continuity should not exist.

OK or NG

OK >> GO TO 6.
NG >> Repair or replace harness and connector that have malfunction.

6. CHECK WHEEL SENSOR

1. Replace wheel sensor that resulted in malfunction by self-diagnosis.
2. Reconnect connectors, drive vehicle at 30 km/h (19 MPH) or more for approximately 1 minute, and then perform self-diagnosis.

Self-diagnostic results
FR RH SENSOR-1, -2
FR LH SENSOR-1, -2
RR RH SENSOR-1, -2
RR LH SENSOR-1, -2

Is above displayed on self-diagnosis display?

YES >> Wheel sensor has malfunction.
NO >>
- Replace VDC/TCS/ABS control unit.
- Perform to self-diagnosis again, and make sure that the result shows “NO DTC IS DETECTED. FURTHER TESTING MAY BE REQUIRED.”

Engine System

AFS002OF

INSPECTION PROCEDURE

1. CHECK SELF-DIAGNOSTIC RESULTS

Check self-diagnostic results.

Self-diagnostic results
ENGINE SYSTEM 1
ENGINE SYSTEM 2
ENGINE SYSTEM 3
ENGINE SYSTEM 4
ENGINE SYSTEM 6

Is above displayed on self-diagnosis displayed?

YES >> GO TO 2.
NO >> INSPECTION END

2. CHECK ENGINE SYSTEM

1. Perform ECM self-diagnosis. Repair or replace items indicated, then perform ECM self-diagnosis again.
2. Perform VDC/TCS/ABS control unit self-diagnosis again.

OK or NG

OK >> INSPECTION END
NG >> Repair or replace items indicated, and perform VDC/TCS/ABS control unit self-diagnosis again.

VDC/TCS/ABS Control Unit

AFS002OG

INSPECTION PROCEDURE

1. CHECK SELF-DIAGNOSTIC RESULTS

Check self-diagnostic results.

Self-diagnostic results
CONTROLLER FAILURE
EMERGENCY BRAKE

CAUTION:
Replace VDC/TCS/ABS control unit when self-diagnostic result shows items other than those above.

Is above displayed in the self-diagnosis display items?

YES >> 1. Replace VDC/TCS/ABS control unit, and perform self-diagnosis again.
2. Perform to self-diagnosis again, and make sure that the result shows "NO DTC IS DETECTED."

NO >> INSPECTION END

Pressure Sensor

AFS002OH

INSPECTION PROCEDURE

1. CHECK SELF-DIAGNOSTIC RESULTS

Check self-diagnostic results.

Self-diagnostic results
PRESSURE SEN CIRCUIT

Is above displayed in the self-diagnosis display items?

YES >> GO TO 2.
NO >> INSPECTION END

2. CHECK CONNECTOR

1. Turn ignition switch OFF and disconnect pressure sensor connector and VDC/TCS/ABS control unit connector, check terminals for defamation, disconnection, looseness, and so on. If any malfunction is found, repair or replace terminal.
2. Reconnect connectors and re-perform VDC/TCS/ABS control unit self-diagnosis.

Is the result of self-diagnosis normal?

YES >> Connector terminal contact is loose, damaged, open or shorted.
NO >> GO TO 3.

3. CHECK PRESSURE SENSOR CIRCUIT

1. Turn ignition switch OFF and disconnect VDC actuator connector E67 and VDC/TCS/ABS control unit connector.
2. Check continuity between VDC/TCS/ABS control unit harness connector E122 and VDC actuator harness connector E67.

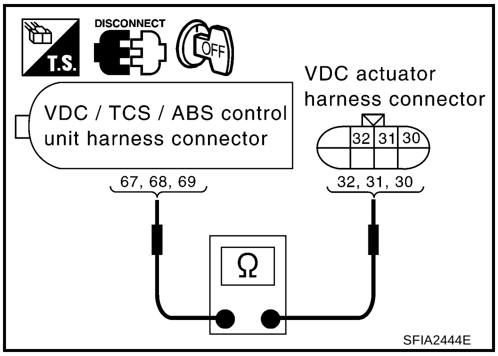

VDC/TCS/ABS control unit (harness connector E122)	Pressure sensor (VDC actuator harness connector E67)	Continuity
69	30	Yes
68	31	
67	32	

OK or NG

OK >> GO TO 4.
NG >> Repair or replace the disconnected harness.

4. CHECK PRESSURE SENSOR

1. Connect pressure sensor connector and VDC/TCS/ABS control unit connector.
2. Check pressure sensor value on “DATA MONITOR”.

Condition	Data monitor display
Brake pedal is depressed	Positive value
Brake pedal is released	Approx. 0 bar

OK or NG

OK >> Perform self-diagnosis again.
NG >> Pressure sensor malfunction. Replace VDC actuator (inside pressure sensor).

Steering Angle Sensor

AFS002OI

INSPECTION PROCEDURE

1. CHECK SELF-DIAGNOSTIC RESULTS

Check self-diagnostic results.

Self-diagnostic results
ST ANGLE SEN CIRCUIT

Is above displayed in the self-diagnosis display items?

YES >> GO TO 2.
NO >> INSPECTION END

A B C D E BRC G H I J K L M

2. CHECK CONNECTOR

1. Turn ignition switch OFF and disconnect steering angle sensor connector and VDC/TCS/ABS control unit connector. And check terminals for deformation, disconnection, looseness, and so on. If any malfunction is found, repair or replace terminal.
2. Reconnect connectors and perform a VDC/TCS/ABS control unit self-diagnosis again.

Is the result of self-diagnosis normal?

YES >> Connector terminal contact is loose, damaged, open or shorted.
NO >> GO TO 3.

3. CHECK STEERING ANGLE SENSOR CIRCUIT

1. Check CAN communication circuit. Refer to BRC-85, "CAN Communication" .
2. Turn ignition switch OFF and disconnect VDC/TCS/ABS control unit connector and steering angle sensor connector.
3. Check continuity between VDC/TCS/ABS control unit harness connector E122 and steering angle sensor harness connector M81.

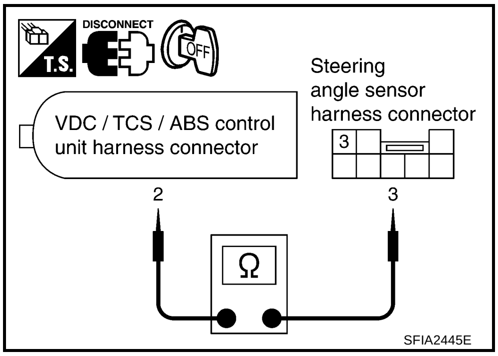

VDC/TCS/ABS control unit (harness connector E122)	Steering angle sensor (harness connector M81)	Continuity
2	3	Yes

OK or NG

OK >> GO TO 4.
NG >> Open or short in harness. Repair or replace harness.

4. DATA MONITOR CHECK

1. Connect the steering angle sensor connector and VDC/TCS/ABS control unit connector.
2. Perform "DATA MONITOR" of the "STR ANGLE SIG" to check if the status is normal.

Steering condition	Date monitor
Driving straight	-5° to+5°
Turn 90° to right	Approx. +90°
Turn 90° to left	Approx. -90°

OK or NG

OK >> Perform self-diagnosis again.
NG >> Replace spiral cable (steering angle sensor) and adjust neutral position of steering angle sensor. Refer to BRC-43, "Adjustment of Steering Angle Sensor Neutral Position" .

Yaw Rate/Side G Sensor

AFS002OJ

CAUTION:

Sudden turns (such as spin turns, acceleration turns), drifting, etc. When VDC function is off (VDC OFF switch "ON") may cause yaw rate/side G-sensor system to indicate a malfunction. However, this is not a malfunction, if normal operation can be resumed after restarting engine. Then erase memory of self-diagnosis.

INSPECTION PROCEDURE

1. CHECK SELF-DIAGNOSTIC RESULTS

Check self-diagnostic results.

Self-diagnostic results
YAW RATE SEN
SIDE G SEN CIRCUIT

CAUTION:

If vehicle is on turn-table at entrance to parking garage, or on other moving surface, VDC OFF indicator lamp may illuminate and CONSULT-II self-diagnosis may indicate yaw rate sensor system malfunction. However, in this case there is no malfunction in yaw rate sensor system. Take vehicle off of turntable or other moving surface, and start engine. Results will return to normal. And after doing spin turns or acceleration turns with VDC function is off (VDC OFF switch “ON”), too, the results will return to a normal state by re-starting vehicle.

Is above displayed in the self-diagnostic item?

YES >> GO TO 2.
NO >> INSPECTION END

2. CHECK CONNECTOR

1. Turn ignition switch OFF and disconnect yaw rate/side G sensor connector and VDC/TCS/ABS control unit connector and check terminals for deformation, disconnection, looseness, and so on. If any malfunction is found, repair or replace terminal.
2. Reconnect connectors and perform a VDC/TCS/ABS control unit self-diagnosis again.

Is the result of self-diagnosis normal?

YES >> Connector terminal contact is loose, damaged, open or shorted.
NO >> GO TO 3.

3. CHECK YAW RATE/SIDE G SENSOR HARNESS

1. Turn ignition switch OFF and disconnect yaw rate/side G sensor connector and VDC/TCS/ABS control unit connector.
2. Check continuity between VDC/TCS/ABS control unit harness connector E122 and yaw rate/side G sensor harness connector B112.

VDC/TCS/ABS control unit (harness connector E122)	Yaw rate/ Side G sensor (harness connector B112)	Continuity
78	1	Yes
77	2	
34	3	
79	4	
18	5	
80	6	

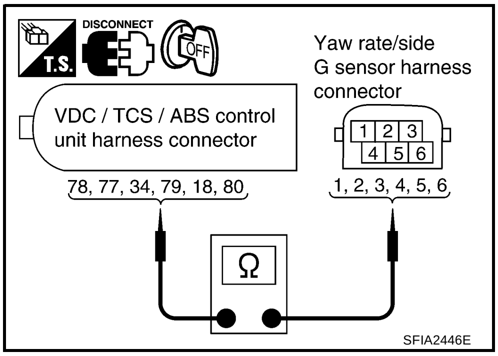

OK or NG

OK >> GO TO 4.
NG >> Open or short in harness. Repair or replace harness.

4. **PERFORM DATA MONITOR**

1. Connect yaw rate /side G sensor connector and VDC/TCS/ABS control unit connector.
2. Use "DATA MONITOR" to check if the yaw rate/side G sensor is normal.

Vehicle condition	Yaw rate sensor (Data monitor standard)	Side G sensor (Data monitor standard)
Stopped	– 4 to +4 deg/s	– 1.1 to +1.1 m/s^2
Turning right	Negative value	Negative value
Turning left	Positive value	Positive value

OK or NG

OK >> Perform self-diagnosis again.
NG >> Malfunction of yaw rate/side G sensor. Replace sensor and perform self-diagnosis again.

Solenoid and VDC Switching Valve

AFS002OK

INSPECTION PROCEDURE

1. **CHECK SELF-DIAGNOSTIC RESULTS**

Check self-diagnostic results.

Self-diagnostic results
FR LH IN ABS SOL
FR LH OUT ABS SOL
RR RH IN ABS SOL
RR RH OUT ABS SOL
FR RH IN ABS SOL
FR RH OUT ABS SOL
RR LH IN ABS SOL
RR LH OUT ABS SOL
USV LINE [FL-RR]
USV LINE [FR-RL]
HSV LINE [FL-RR]
HSV LINE [FR-RL]

Is above displayed in the self-diagnosis item?

YES >> GO TO 2.
NO >> INSPECTION END

2. **CHECK CONNECTOR**

1. Turn ignition switch OFF, disconnect VDC/TCS/ABS control unit connector, and check terminal for deformation, disconnection, looseness, and so on. If there is a malfunction, repair or replace terminal.
2. Connect the connector securely and perform self-diagnosis again.

Is the result of self-diagnosis normal?

YES >> Connector terminal contact is loose, damaged, open or shorted.
NO >> GO TO 3.

3. CHECK SOLENOID AND VDC SWITCHING VALVE HARNESS

1. Turn ignition switch OFF and disconnect VDC actuator connector E67,E68 and VDC/TCS/ABS control unit connector.
2. Check continuity between VDC/TCS/ABS control unit harness connector E122 and VDC actuator harness connector E67, E68.

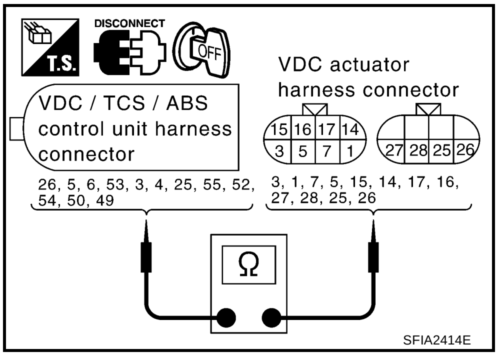

Item	VDC/TCS/ABS control unit (harness connector E122)	VDC actuator (harness connector E67,E68)	Continuity
FR LH IN SOL	5	1	Yes
FR LH OUT SOL	3	14	
RR RH IN SOL	6	7	
RR RH OUT SOL	4	17	
FR RH IN SOL	26	3	
FR RH OUT SOL	55	15	
RR LH IN SOL	53	5	
RR LH OUT SOL	25	16	
USV LINE [FL-RR]	49	26	
USV LINE [FR-RL]	50	25	
HSV LINE [FL-RR]	54	28	
HSV LINE [FR-RL]	52	27	

OK or NG

OK >> GO TO 4.
NG >> Open or short in harness between VDC/TCS/ABS control unit and VDC actuator.

4. CHECK SOLENOID AND VDC SWITCHING VALVE INPUT SIGNAL

1. Disconnect VDC relay box connector.
2. Check resistance of VDC actuator solenoid.

VDC actuator connector	VDC relay box (harness connector E57)	Resistance value
1, 3, 5, 7, 25, 26	16	6.0 - 11 Ω
14, 15, 16, 17, 27, 28		3.0 - 5.0 Ω

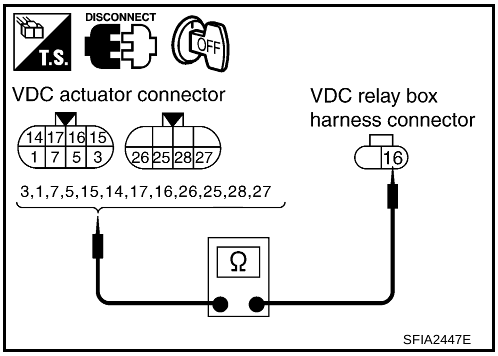

OK or NG

OK >> Check power supply circuit of VDC/TCS/ABS control unit. Refer to BRC-82, "VDC/TCS/ABS Control Unit Power And Ground" .
NO >> Replace VDC actuator assembly.

Actuator Motor and Motor Relay

AFS002OL

INSPECTION PROCEDURE

1. CHECK SELF-DIAGNOSTIC RESULTS

Check self-diagnostic results.

Self-diagnostic results
PUMP MOTOR, MOTOR RELAY

Is above displayed in the self-diagnosis item?

YES >> GO TO 2.
NO >> INSPECTION END

2. CHECK CONNECTOR

1. Turn ignition switch OFF and disconnect VDC/TCS/ABS control unit connector, VDC actuator connector and VDC relay box connector. Then reconnect them securely.
2. Reconnect connectors securely and perform self-diagnosis again.

Is the result of self-diagnosis normal?

YES >> Connector terminal contact is loose, damaged, open or shorted.
NO >> GO TO 3.

3. CHECK ABS MOTOR AND MOTOR RELAY POWER SUPPLY CIRCUIT

1. Disconnect VDC relay box connector E55.
2. Check voltage between VDC relay box harness connector E55 and ground.

VDC relay box (harness connector E55)	Ground	Voltage
10	—	Battery voltage (Approx. 12 V)

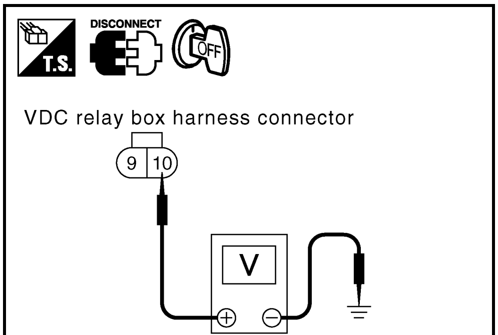

SFIA2366E

OK or NG

OK >> GO TO 4.
NG >> The circuit between battery and relay unit terminal No. 10 is open or shorted. Repair circuit.

4. CHECK ABS MOTOR AND MOTOR RELAY HARNESS

1. Disconnect VDC/TCS/ABS control unit and VDC relay box connector E56.
2. Check continuity between VDC/TCS/ABS control unit harness connector E122 and VDC relay box harness connector E56.

VDC/TCS/ABS control unit (harness connector E122)	VDC relay box (harness connector E56)	Continuity
20	4	Yes
7	8	Yes

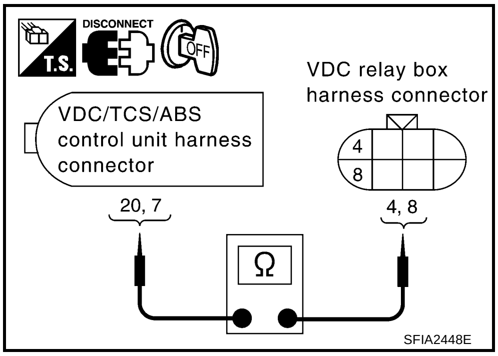

SFIA2448E

OK or NG

OK >> GO TO 5.
NG >> Open or short in harness. Repair or replace harness.

5. CHECK ACTUATOR MOTOR

Check if actuator motor operates after energizing approximately 12V to the connector terminal 15 at the VDC relay box harness connector E57.

CAUTION:
To prevent overheating, do not drive actuator motor more than 4 seconds.

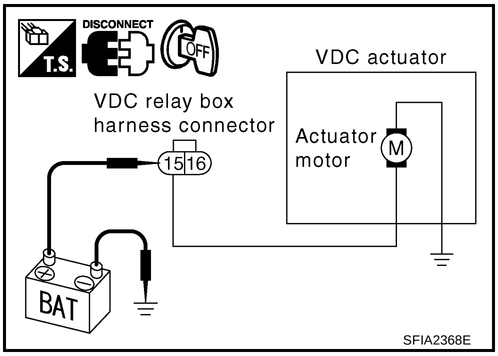

OK or NG

OK >> GO TO 6.
NG >> Actuator motor or actuator motor circuit open or short in harness. Replace VDC actuator.

6. CHECK MOTOR RELAY UNIT

Check motor relay as a unit. Refer to BRC-86, "MOTOR RELAY AND ACTUATOR RELAY" .

OK or NG

OK >> Replace VDC/TCS/ABS control unit.
NG >> Replace VDC relay box.

Actuator Relay

AFS002OM

INSPECTION PROCEDURE

1. CHECK SELF-DIAGNOSTIC RESULTS

Check self-diagnostic results.

Self-diagnostic results
MAIN RELAY

Is above displayed in the self-diagnosis item?

YES >> GO TO 2.
NO >> INSPECTION END

2. CHECK CONNECTOR

1. Turn ignition switch OFF, disconnect VDC/TCS/ABS control unit connector, and check terminal for deformation, disconnection, looseness, and so on. If there is a malfunction, repair or replace terminal.
2. Connect the connector securely and perform self-diagnosis again.

Is the result of self-diagnosis normal?

YES >> Connector terminal contact is loose, damaged, open or shorted.
NO >> GO TO 3.

3. CHECK ACTUATOR RELAY POWER SUPPLY CIRCUIT

1. Turn ignition switch OFF and disconnect VDC relay box connector E55.
2. Check voltage between VDC relay box harness connector E55 and ground.

VDC relay box (harness connector E55)	Ground	Voltage
9	—	Battery voltage (Approx. 12V)

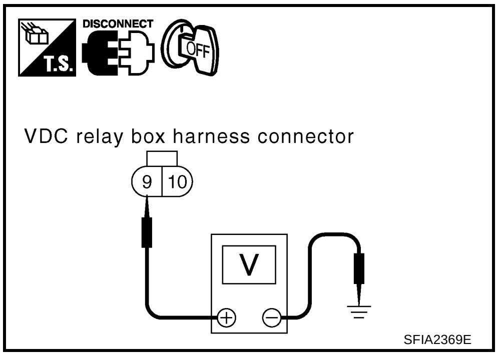

OK or NG

OK >> GO TO 4.
NG >>
- Check the fuse 30 A.
- The circuit between battery and relay unit terminal No. 9 is open or shorted. Repair circuit.

4. CHECK ACTUATOR RELAY HARNESS

1. Disconnect VDC/TCS/ABS control unit connector and VDC relay box connector E56.
2. Check continuity between VDC/TCS/ABS control unit harness connector E122 and VDC relay box harness connector E56.

VDC/TCS/ABS control unit (harness connector E122)	VDC relay box (harness connector E56)	Continuity
2	5	Yes
36	7	Yes

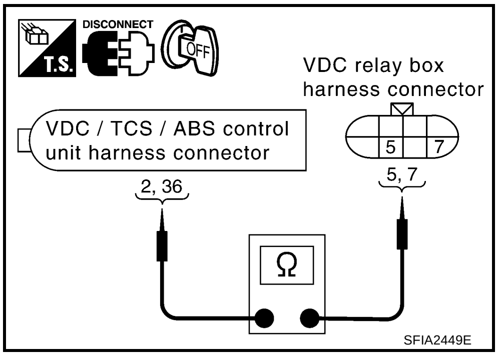

OK or NG

OK >> GO TO 5.
NG >> Open or short in harness between VDC/TCS/ABS control unit and VDC relay box.

5. CHECK ACTUATOR RELAY UNIT

Check actuator relay as a unit. Refer to BRC-86, "MOTOR RELAY AND ACTUATOR RELAY" .

OK or NG

OK >> Replace VDC/TCS/ABS control unit.
NG >> Replace VDC relay box.

Stop Lamp Switch Circuit

AFS002ON

INSPECTION PROCEDURE

1. CHECKING SELF-DIAGNOSTIC RESULTS

Check self-diagnostic results.

Self-diagnostic results
STOP LAMP SW

Is above displayed in the self-diagnosis item?

YES >> GO TO 2.
NO >> INSPECTION END

2. CHECK CONNECTOR

1. Turn ignition switch OFF and disconnect stop lamp switch connector and VDC/TCS/ABS control unit connector.
2. Reconnect connectors securely.
3. Start engine.
4. Repeat pumping brake pedal carefully several times, and perform self-diagnosis again.

Is the result of self-diagnosis normal?

YES >> Connector terminal contact is loose, damaged, open or shorted.
NO >> GO TO 3.

3. CHECK STOP LAMP SWITCH CIRCUIT

1. Turn ignition switch OFF and disconnect VDC/TCS/ABS control unit harness connector.
2. Check voltage between VDC/TCS/ABS control unit harness connector E122 terminal 48 and ground.

VDC/TCS/ABS control unit (harness connector E122)	Ground	Measurement condition	Battery voltage (Approx. 12V)
48	—	Brake pedal depressed	12 V
		Brake pedal not depressed	approx. 0V

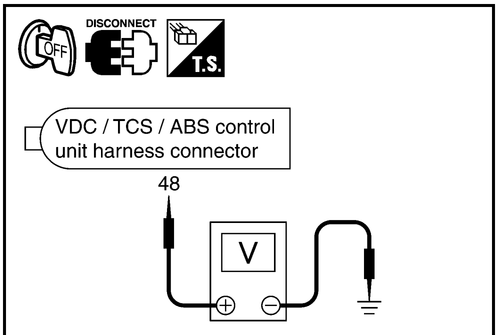

SFIA2450E

OK or NG

OK >> Connect connector securely and perform self-diagnosis again.
NG >> Stop lamp switch circuit malfunction. Repair circuit.

VDC/TCS/ABS Control Unit Power And Ground

AFS002OO

INSPECTION PROCEDURE

1. CHECK SELF-DIAGNOSTIC RESULTS

Check self-diagnostic results.

Self-diagnostic results
BATTERY VOLTAGE

Is above displayed in the self-diagnosis item?

YES >> GO TO 2.
NO >> INSPECTION END

2. CHECK CONNECTOR

1. Turn ignition switch OFF and disconnect VDC/TCS/ABS control unit connector. Then reconnect it securely.
2. Perform self-diagnosis.

Is the result of self-diagnosis normal?

YES >> Connector terminal contact is loose, damaged, open or shorted.
NO >> GO TO 3.

3. CHECK VDC/TCS/ABS CONTROL UNIT POWER AND GROUND CIRCUIT

1. Turn ignition switch OFF and disconnect VDC/TCS/ABS control unit connector.
2. Turn ignition switch ON or OFF and check voltage and continuity between VDC/TCS/ABS control unit harness connector E122 and ground.

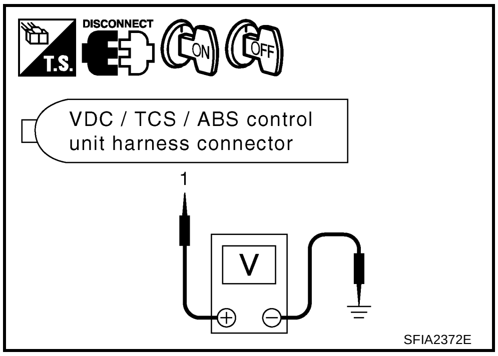

Signal	VDC/TCS/ABS control unit (harness connector E122)	Ground	Condition	Voltage
Power supply	1	—	Ignition switch turn ON	Battery voltge (Approx. 12V)
			Ignition switch turn OFF	Approx. 0V

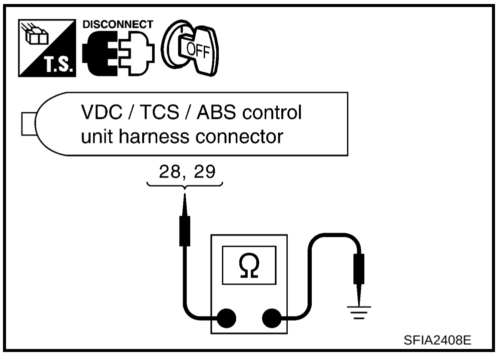

Signal	VDC/TCS/ABS control unit (harness connector E122)	Ground	Condition	Continuity
Ground	28, 29	—	Ignition switch turn OFF	Yes

OK or NG

OK >> Check battery for loose terminal and low voltage malfunction. Repair if necessary.
NG >> Corresponding harness circuit malfunction. Repair circuit.

Park/Neutral Position (PNP) Switch (Only A/T Models)

AFS002OP

INSPECTION PROCEDURE

1. CHECK SELF-DIAGNOSTIC RESULTS

Check self-diagnostic results.

Self-diagnostic results
SHIFT POSITION ERROR

Is above displayed in the self-diagnosis item?

YES >> GO TO 2.
NO >> INSPECTION END

2. PERFORM DATA MONITOR

In “DATA MONITOR” select “ITEM MENU” and then check P position.

Selector lever position	Position (data monitor)
P position	ON
Other than P position.	OFF

OK or NG

OK >> Perform self-diagnosis again.
NG >> GO TO 3.

3. CHECK PARK/NEUTRAL POSITION (PNP) SWITCH

Perform Park/Neutral position (PNP) switch inspection. Refer to AT-96, "DTC P0705 PARK/NEUTRAL POSITION (PNP) SWITCH" .

OK or NG

OK >> Perform self-diagnosis again.
NG >> Repair indicated items and perform self-diagnosis again.

Brake Fluid Level Switch

AFS002OR

INSPECTION PROCEDURE

1. CHECK SELF-DIAGNOSTIC RESULTS

Check self-diagnostic results.

Self-diagnostic results
BR FLUID LEVEL LOW

Is above displayed in the self-diagnosis item?

YES >> GO TO 2.
NO >> INSPECTION END

2. CHECK CONNECTOR

1. Turn ignition switch OFF and disconnect brake fluid level switch connector and VDC/TCS/ABS control unit connector. And check terminals for deformation, disconnection, looseness, and so on. If any malfunction is found, repair or replace terminal.
2. Reconnect connectors and perform a VDC/TCS/ABS control unit self-diagnosis again.

Is the result of self-diagnosis normal?

YES >> Connector terminal contact is loose, damaged, open or shorted.
NO >> GO TO 3.

3. CHECK BRAKE FLUID LEVEL SWITCH

1. Turn ignition switch OFF and disconnect brake fluid level switch connector.
2. Check continuity between brake fluid level switch connector terminal 1 and 2.

Between terminal 1 and 2

When brake fluid is full in the reservoir tank : No

When brake fluid is empty in the reservoir tank : Yes

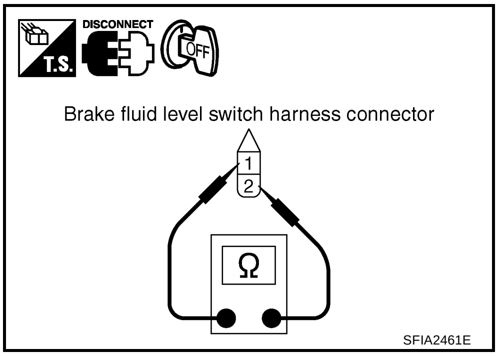

OK or NG

OK >> Go to 4
NG >> Impaired brake fluid level switch

4. CHECK HARNESS BETWEEN BRAKE FLUID LEVEL SWITCH AND VDC/TCS/ABS CONTROL UNIT

1. Disconnect VDC/TCS/ABS control unit.
2. Check continuity between brake fluid level switch connector and VDC/TCS/ABS control unit connector.

VDC/TCS/ABS control unit harness connector	Brake fluid level switch connector	Continuity
40	1	Yes
	Ground	No
Ground	2	Yes

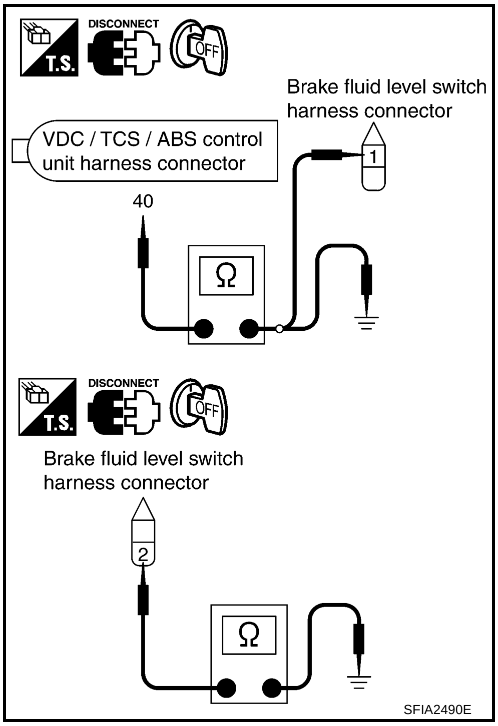

OK or NG

OK >> Connect connectors securely and perform self-diagnosis again.
NG >> Impaired harness or terminal. Replace or repair harness or terminal.

CAN Communication

AFS002OS

INSPECTION PROCEDURE

1. CHECK CONNECTOR

1. Turn ignition switch OFF and disconnect VDC/TCS/ABS control unit connector and steering angle sensor connector. Check terminal for deformation, disconnection, looseness, and so on. If any malfunction is found, repair or replace terminal.
2. Securely reconnect connectors and perform self-diagnosis.

Self-diagnostic results
CAN COMM CIRCUIT
ST ANG SEN COM CIR

Is above displayed in the self-diagnosis item?

YES >> Print out self-diagnostic results and go to LAN-4, "TROUBLE DIAGNOSES WORK FLOW" .
NO >> Connector terminal connection is loose, damaged, open or shorted.

Component Inspection

AFS002OT

VDC OFF SWITCH

- Turn ignition switch is OFF and disconnect VDC OFF switch connector. Check continuity between terminal 1 and 2.

1–2: Pressing switch will establish continuity, releasing it will break continuity.

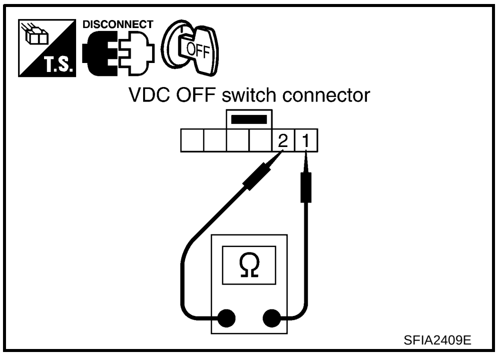

PARKING BRAKE SWITCH

- Turn ignition switch OFF. Check continuity between parking brake switch connector B114 and ground

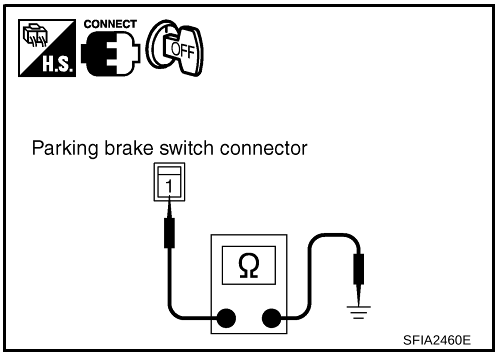

Parking brake switch connector B114	Ground	Measurement condition	Continuity
1	—	Pulling the control lever	Yes
		Not pulling the control lever	No

BRAKE FLUID LEVEL SWITCH

- Refer to BRC-84, "Brake Fluid Level Switch" .

MOTOR RELAY AND ACTUATOR RELAY

- Turn ignition switch OFF and disconnect VDC/TCS/ABS relay box connector.
- Check continuity between the terminals listed below when energizing 12V between motor relay terminal 8 and 5, between actuator terminal 5 and 7.

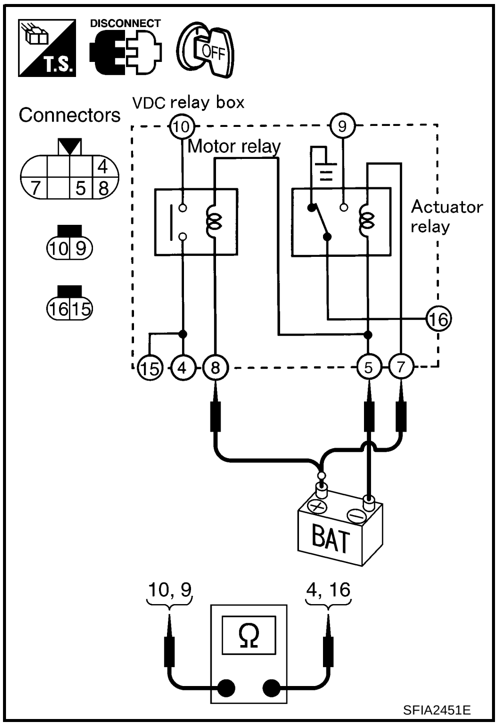

Motor relay	Terminals between 10 and 4	Yes
Actuator relay	Terminals between 9 and 16	

VDC ACTUATOR

1. Turn ignition switch OFF, apply a voltage of 12 V between VDC relay box connector terminal 5 and 8, use an oscilloscope to measure motor voltage at this time (between terminal 4 and ground), and check motor reverse voltage occurrence time when operation is stopped.

Motor reverse voltage occurrence time:

0.1 second or more

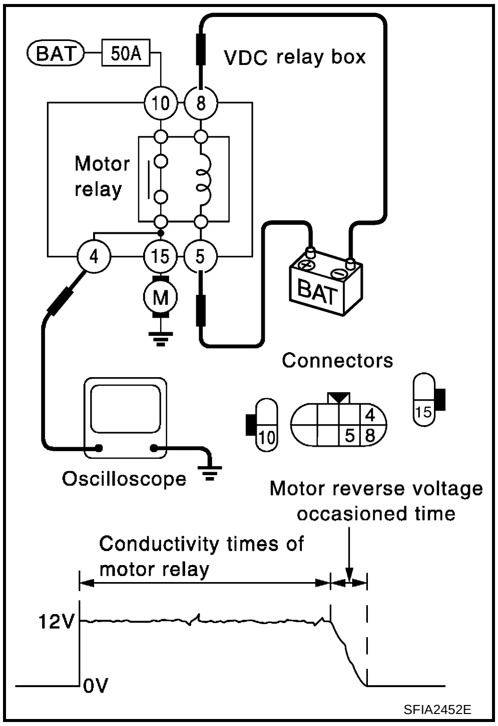

SFIA2452E

CAUTION:

- **Above check should be performed after motor relay unit inspection to make sure relay operates normally.**
- **To prevent overheating, do not drive actuator motor more than 4 seconds.**
- **Motor reverse voltage occurrence time is standard when battery voltage is 12 V and the air temperature is 20°C (68°F), and this time is a little shorter when battery voltage is low or the air temperature is low.**

Disconnect VDC actuator connectors. Check continuity and resistance value between any pair of terminals on the actuator.

TROUBLE DIAGNOSIS FOR SYMPTOMS

PFP:00007

Excessive ABS Function Operation Frequency

AFS002OU

1. CHECK START

Check longitudinal brake force distribution using a brake tester. Refer to BR-37, "SERVICE DATA AND SPECIFICATIONS (SDS)" .

OK or NG

OK >> GO TO 2.

NG >> ● Check the following system. If any malfunction is found, repair or replace malfunctioning parts.

- Brake booster. Refer to BR-21, "BRAKE BOOSTER" .
- Hydraulic line. Refer to BR-11, "BRAKE PIPING AND HOSE" .
- Front brake caliper. Refer to BR-25, "FRONT DISC BRAKE" .
- Rear brake caliper. Refer to BR-31, "REAR DISC BRAKE" .

2. CHECK FRONT AND REAR AXLE

Make sure that there is no excessive play in the front and rear axles. Refer to Front: FSU-6, "On-Vehicle Inspection and Service" , Rear: RSU-5, "On-Vehicle Inspection and Service" .

OK or NG

OK >> GO TO 3.

NG >> Repair.

3. CHECK WHEEL SENSOR AND SENSOR ROTOR

Check wheel sensor and sensor rotor for the following.

- Wheel sensor installation for damage
- Wheel sensor rotor installation for damage
- Wheel sensor connector connection
- Wheel sensor harness inspection

OK or NG

OK >> GO TO 4.

NG >> ● Replace wheel sensor or sensor rotor.

● Repair harness.

4. CHECK ABS WARNING LAMP DISPLAY

Make sure that the ABS warning lamp is turned off after the ignition switch is turned ON or when driving.

OK or NG

OK >> Normal

NG >> Perform self-diagnosis. Refer to BRC-61, "Self-Diagnosis" .

Unexpected Pedal Reaction

AFS002OV

1. CHECK BRAKE PEDAL STROKE

Check brake pedal stroke. Refer to BR-6, "Inspection and Adjustment" .

Is the stroke too big?

YES >> ● Bleed air from the brake piping. Refer to BR-10, "Bleeding Brake System" .

● Check brake pedal, brake booster, and master cylinder for mount play, looseness, brake system fluid leakage, etc. Repair if necessary. Refer to Brake pedal: BR-7, "COMPONENTS" , brake booster and master cylinder: BR-22, "COMPONENTS" .

NO >> GO TO 2.

2. CHECK FUNCTION

Disconnect VDC/TCS/ABS control unit connector to deactivate ABS. Check if braking force is normal in this condition. Connect connector after inspection.

OK or NG

OK >> GO TO procedure 3″CHECK WHEEL SENSOR AND SENSOR ROTOR″ of symptom 1. Refer to BRC-88, "Excessive ABS Function Operation Frequency" .

NG >>
- Check the following system. If any malfunction is found, repair or replace malfunctioning parts.
  - Brake booster. Refer to BR-21, "BRAKE BOOSTER" .
  - Hydraulic line. Refer to BR-11, "BRAKE PIPING AND HOSE" .
  - Front brake caliper. Refer to BR-25, "FRONT DISC BRAKE" .
  - Rear brake caliper. Refer to BR-31, "REAR DISC BRAKE" .

The Stopping Distance Is Long

AFS002OW

CAUTION:

The stopping distance on slippery road surfaces might be longer with the ABS operating than when the ABS is not operating.

1. CHECK FUNCTION

Turn ignition switch OFF. Disconnect VDC/TCS/ABS control unit connector to deactivate ABS. In this condition, check stopping distance. After inspection, connect connector.

OK or NG

OK >> GO TO procedure 3″CHECK WHEEL SENSOR AND SENSOR ROTOR″ of symptom 1. Refer to BRC-88, "Excessive ABS Function Operation Frequency" .

NG >>
- Bleed air from the brake piping. Refer to BR-10, "Bleeding Brake System" .
- Check the following system. If any malfunction is found, repair or replace malfunctioning parts.
  - Brake booster. Refer to BR-21, "BRAKE BOOSTER" .
  - Hydraulic line. Refer to BR-11, "BRAKE PIPING AND HOSE" .
  - Front brake caliper. Refer to BR-25, "FRONT DISC BRAKE" .
  - Rear brake caliper. Refer to BR-31, "REAR DISC BRAKE" .

ABS Function Does Not Operate

AFS002OX

CAUTION:

ABS does not operate when speed is 10 km/h (6 MPH) or lower.

1. CHECK ABS WARNING LAMP DISPLAY

Make sure that the ABS warning lamp turns off after the ignition switch is turned ON or when driving.

OK or NG

OK >> GO TO procedure 3″CHECK WHEEL SENSOR AND SENSOR ROTOR″ of symptom1. Refer to BRC-88, "Excessive ABS Function Operation Frequency" .
NG >> Perform self-diagnosis. Refer to BRC-61, "Self-Diagnosis" .

Pedal Vibration or ABS Operation Sound Occurs

AFS002OY

CAUTION:

Under the following conditions, ABS is activated and vibration is felt when brake pedal is lightly depressed (just place a foot on it). However, this is normal.

- **When shifting gears**
- **When driving on slippery road**
- **During cornering at high speed**
- **When passing over bumps or grooves [at approximately 50 mm (1.97 in) or more]**
- **When pulling away just after starting engine [at approximately 10 km/h (6 MPH) or more]**

1. SYMPTOM CHECK 1

Check if there is pedal vibration or operation noise when the engine is started.

Do symptoms occur?

YES >> GO TO 2.
NO >> Perform self-diagnosis. Refer to BRC-61, "Self-Diagnosis" .

2. SYMPTOM CHECK 2

Check symptoms when electrical component (headlamps, etc.) switches are operated.

Do symptoms occur?

YES >> Check if there is a radio, antenna, antenna lead wire, or wiring close to the control unit. If there is, move it farther away.
NO >> GO TO procedure 3″CHECK WHEEL SENSOR AND SENSOR ROTOR″ of symptom1. Refer to BRC-88, "Excessive ABS Function Operation Frequency" .

Vehicle Jerks During VDC/TCS/ABS Control

AFS002OZ

1. SYMPTOM CHECK

Check if the vehicle jerks during VDC/TCS/ABS control.

OK or NG

OK >> Normal
NG >> GO TO 2.

2. CHECK SELF-DIAGNOSTIC RESULTS

Perform self-diagnostic of VDC/TCS/ABS control unit.

Are self-diagnostic results indicated?

YES >> Check the corresponding items, make repairs, and perform VDC/TCS/ABS control unit self-diagnosis.
NO >> GO TO 3.

3. CHECK CONNECTOR

1. Turn ignition switch OFF, disconnect the VDC/TCS/ABS control unit connector and check the terminal for deformation, disconnection, looseness, and so on.
2. Securely connect connectors. Perform VDC/TCS/ABS control unit self-diagnosis.

Are self-diagnostic results indicated?

YES >> If poor contact, damage, open or short circuit of connector terminal is found, repair or replace.
NO >> GO TO 4.

4. CHECK ECM AND TCM SELF-DIAGNOSTIC RESULTS

Perform ECM and TCM self-diagnosis.

Are self-diagnostic results indicated?

YES >> • Check the corresponding items.
- ECM: Refer to EC-83, "TROUBLE DIAGNOSIS" .
- TCM: Refer to AT-42, "TROUBLE DIAGNOSIS" .

NO >> Replace VDC actuator.

ABS Warning Lamp Indication Is Not Normal

AFS002QC

NOTE:
Lighting condition of ABS warning lamp refer to BRC-68, "ON and OFF Timing for ABS Warning Lamp, VDC OFF Indicator Lamp, SLIP Indicator Lamp and Brake warning lamp." .

1. CHECK COMBINATION METER INDICATION

Check the combination meter indication and operation. Refer to DI-14, "Self-Diagnosis Mode of Combination Meter" .

OK or NG

OK >> GO TO 2.
NG >> Combination meter is malfunctioning. Check combination meter. Refer to DI-4, "COMBINATION METERS" .

2. CHECK SELF DIAGNOSTIC RESULTS

Check the self-diagnostic results of VDC/TCS/ABS control unit. Refer to BRC-61, "Self-Diagnosis" .

OK or NG

OK >> GO TO procedure 1 of symptom 7.
NG >> Check the items indicated with self-diagnosis.

Slip Indicator Lamp Indication Is Not Normal

AFS002QD

NOTE:
Lighting condition of slip indicator lamp refer to BRC-68, "ON and OFF Timing for ABS Warning Lamp, VDC OFF Indicator Lamp, SLIP Indicator Lamp and Brake warning lamp." .

1. CHECK COMBINATION METER INDICATION

Check the combination meter indication and operation. Refer to DI-14, "Self-Diagnosis Mode of Combination Meter" .

OK or NG

OK >> GO TO 2.
NG >> Combination meter is malfunctioning. Replace combination meter.

2. CHECK SELF DIAGNOSTIC RESULTS

Check the self-diagnostic results of VDC/TCS/ABS control unit. Refer to BRC-61, "Self-Diagnosis" .

OK or NG

OK >> GO TO procedure 1 of symptom 8.
NG >> Check the items indicated with self-diagnosis.

VDC OFF Indicator Lamp Indication Is Not Normal

AFS002QE

NOTE:

- Lighting condition of VDC OFF indicator lamp refer to BRC-68, "ON and OFF Timing for ABS Warning Lamp, VDC OFF Indicator Lamp, SLIP Indicator Lamp and Brake warning lamp." .
- Make sure that VDC OFF switch is normal. Refer to BRC-85, "VDC OFF SWITCH" .

1. CHECK COMBINATION METER INDICATION

Check the combination meter indication and operation. Refer to DI-14, "Self-Diagnosis Mode of Combination Meter" .

OK or NG

OK >> GO TO 2.
NG >> Combination meter is malfunctioning. Check combination meter. Refer to DI-4, "COMBINATION METERS" .

2. CHECK SELF DIAGNOSTIC RESULTS

Check the self-diagnostic results of VDC/TCS/ABS control unit. Refer to BRC-61, "Self-Diagnosis" .

OK or NG

OK >> GO TO procedure 1 of symptom 9.
NG >> Check the items indicated with self-diagnosis.

Brake Warning Lamp Indication Is Not Normal

AFS002QF

NOTE:

- Lighting condition of brake warning lamp refer to BRC-68, "ON and OFF Timing for ABS Warning Lamp, VDC OFF Indicator Lamp, SLIP Indicator Lamp and Brake warning lamp." .
- Make sure that brake fluid level switch is normal. Refer to BRC-86, "BRAKE FLUID LEVEL SWITCH" .

1. CHECK COMBINATION METER INDICATION

Check the combination meter indication and operation. Refer to DI-14, "Self-Diagnosis Mode of Combination Meter" .

OK or NG

OK >> GO TO 2.
NG >> Combination meter is malfunctioning. Check combination meter. Refer to DI-4, "COMBINATION METERS" .

2. CHECK SELF DIAGNOSTIC RESULTS

Check the self-diagnostic results of VDC/TCS/ABS control unit. Refer to BRC-61, "Self-Diagnosis" .

OK or NG

OK >> GO TO procedure 1 of symptom 10.
NG >> Check the items indicated with self-diagnosis.

WHEEL SENSORS

PFP:47910

Removal and Installation

AFS002P0

COMPONENTS

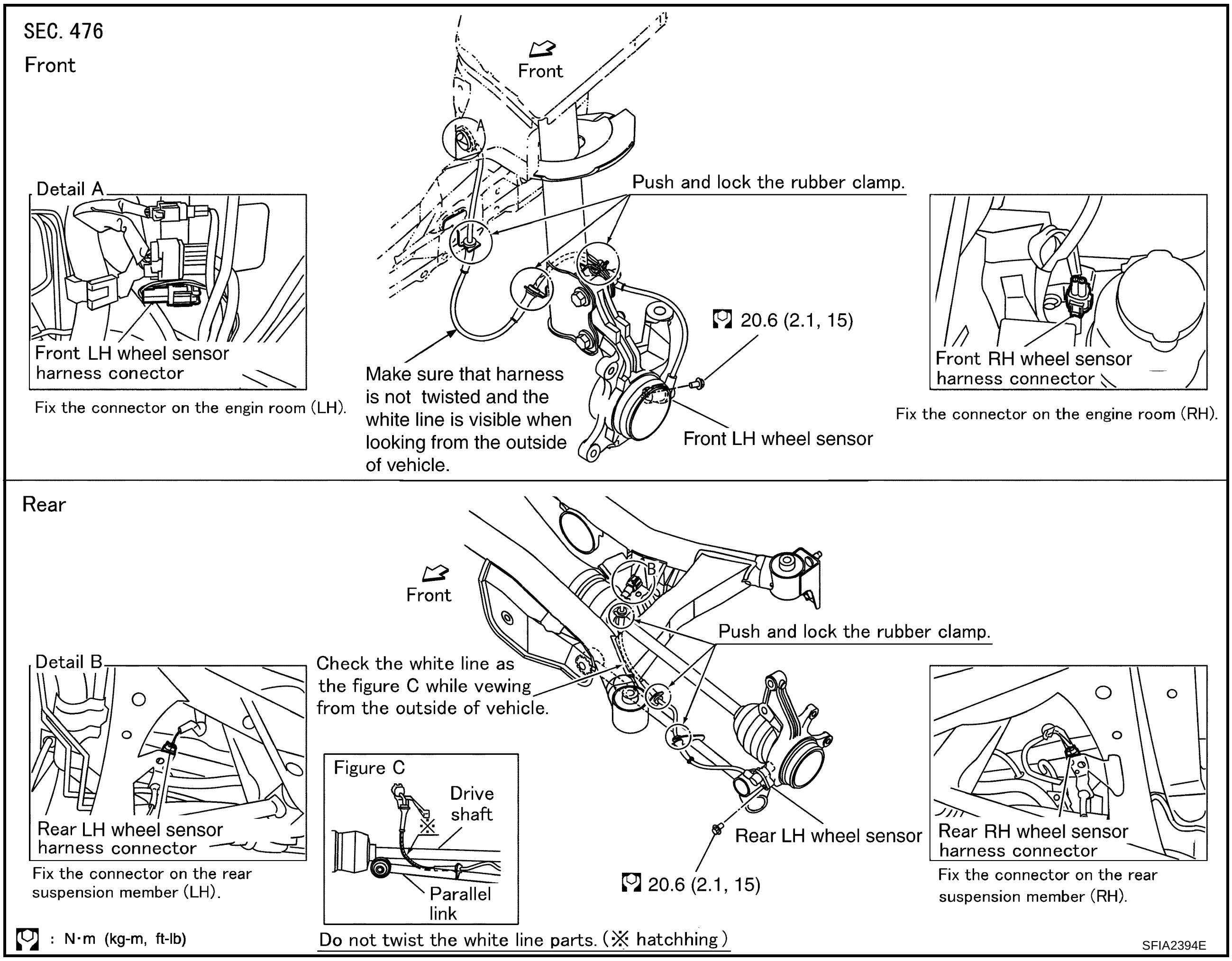

REMOVAL

Be careful of the following.

CAUTION:

When removing the sensor, do not rotate it, if possible, and also do not forcibly pull the sensor harness.

INSTALLATION

Tighten the mounting bolts and nuts to the specified torque. Refer to BRC-93, "Removal and Installation"

CAUTION:

Be careful of the following when installing sensor.

- **When installing, make sure there is no foreign material such as iron chips on pick-up and mounting hole of sensor. Make sure no foreign material has been caught in the sensor rotor. Remove any foreign material and clean the mount.**
- **When installing front sensor, be sure to press rubber grommets in until they lock at the three locations shown in the figure (2 at shock absorbers and 1 at body panel). When installed, harness must not be twisted. White line on harness must be visible from front.**
- **When installing rear sensor, attach harness at rear suspension member securely. Besides, harness must not be twisted when installed.**

SENSOR ROTOR

PFP:47970

Removal and Installation

AFS002P2

REMOVAL

Front

Remove rear sensor rotor from drive shaft. Refer to FAX-25, "Disassembly and Assembly (Models with AWD: RH)" , FAX-28, "Disassembly and Assembly (LH)" .

Rear

Follow procedure below to remove rear sensor rotor. Refer to RAX-22, "Disassembly and Assembly" .

- Remove rear drive shaft. Refer to RAX-21, "Removal and Installation" .
- Remove sensor rotor from rear drive shaft.

INSTALLATION

Front

Install front sensor rotor to front drive shaft. Refer to FAX-25, "Disassembly and Assembly (Models with AWD: RH)" , FAX-28, "Disassembly and Assembly (LH)" .

Rear

Follow procedure below to install rear sensor rotor.

- Install rear sensor rotor to rear drive shaft. Refer to RAX-22, "Disassembly and Assembly" .
- Install rear drive shaft. Refer to RAX-21, "Removal and Installation" .

VDC/TCS/ABS CONTROL UNIT

PFP:47660

Removal and Installation

AFS002P1

CAUTION:

Before servicing, disconnect battery terminals.

REMOVAL

1. Remove instrument lower panel, glove box and glove box cover. Refer to IP-10, "INSTRUMENT PANEL ASSEMBLY" .
2. Remove VDC/TCS/ABS control unit.

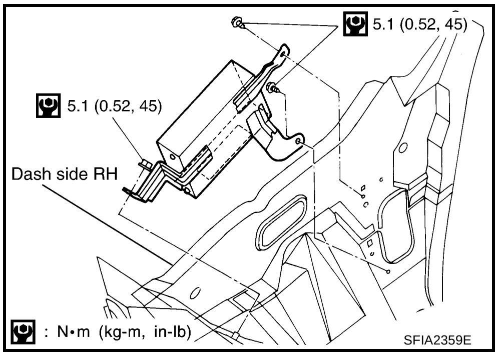

INSTALLATION

Install in the reverse order of removal.

ACTUATOR

PFP:47600

Removal and Installation

AFS002QK

COMPONENTS

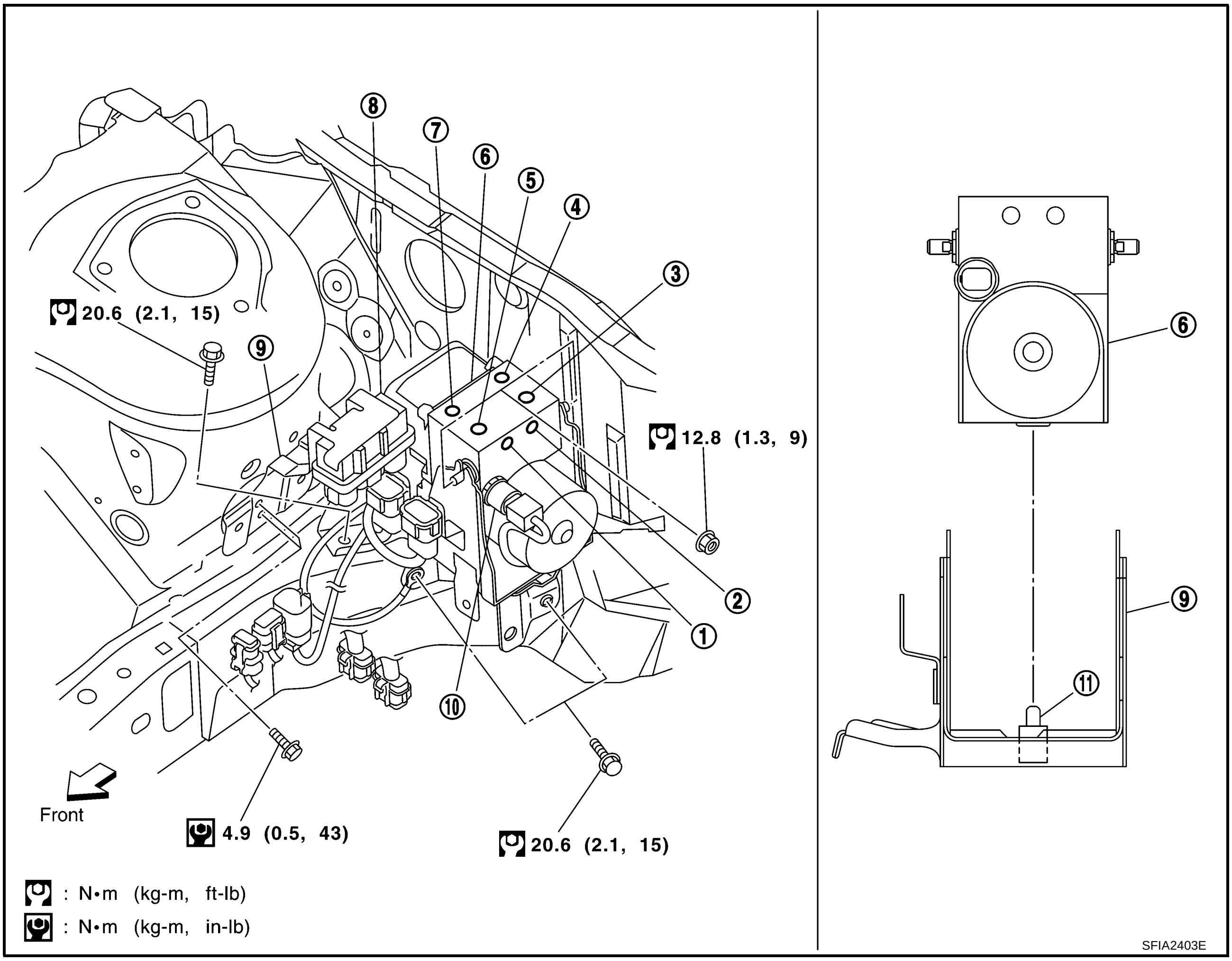

1. To rear LH caliper	2. To rear RH caliper	3. From master cylinder primary side
4. To front LH caliper	5. From master cylinder secondary side	6. VDC actuator
7. To front RH caliper	8. VDC relay box	9. Actuator bracket
10. Pressure sensor	11. Pin	

CAUTION:

- **If the part number on the part number label (pasted on actuator upper surface) is the same, VDC actuator cannot be used on another vehicle.**
  If it is used on another vehicle, ABS warning lamp, SLIP indicator lamp and VDC OFF indicator lamp may turn on or VDC/TCS/ABS may not operate normally.
  When replacing VDC actuator, must use new service parts.
- **Before servicing, disconnect battery terminals.**
- **To remove brake tube, use a flare nut torque wrench to prevent flare nuts and brake tube from being damaged. To install, use a flare nut torque wrench (commercial service tool) and tighten to the specified torque.**
- **Do not apply excessive impact to VDC actuator, such as dropping it.**
- **Do not remove and install VDC actuator by holding harness.**

REMOVAL

1. Remove cowl top cover. Refer to EI-19, "COWL TOP" .
2. Remove wiper motor assembly. Refer to WW-7, "Removal and Installation of Wiper Motor and Linkage" .
3. Remove cowl top box.
4. Disconnect VDC actuator connector.
5. Loosen brake tube flare nuts, then remove brake tubes from VDC actuator.
6. Loosen VDC actuator mounting bolts.
7. Remove VDC actuator from vehicle.

INSTALLATION

Install in the reverse order of removal.

CAUTION:

Be careful of the following when installing VDC actuator.

- **Tighten the mounting bolts and nuts to the specified torque.**
- **After the work, bleed air from brake piping. Refer to BR-10, "Bleeding Brake System" .**
- **After installing body harness connector in the VDC actuator, make sure connector is securely locked.**

G SENSOR

PFP:47930

Removal and Installation

AFS002P4

CAUTION:

- **Do not drop or strike the yaw rate/side G sensor, because it is sensitive to impact.**
- **Do not use power tool, etc. Because yaw rate/side G sensor is weak for the impact.**

REMOVAL

1. Remove center console. Refer to IP-10, "INSTRUMENT PANEL ASSEMBLY" .
2. Disconnect harness connector.
3. Remove mounting nuts and remove G sensor.

   NOTE:
   There is not need to detach the G sensor main body from a bracket.

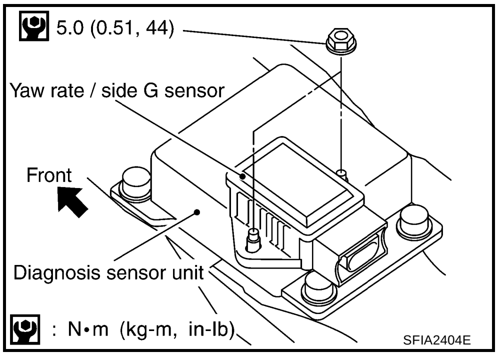

INSTALLATION

Install in the reverse order of removal. Observe the precautions above.

STEERING ANGLE SENSOR

PFP:25554

Removal and Installation

AFS002P5

REMOVAL

1. Remove spiral cable assembly. Refer to SRS-33, "SPIRAL CABLE" .
2. Remove steering angle sensor from spiral cable assembly.

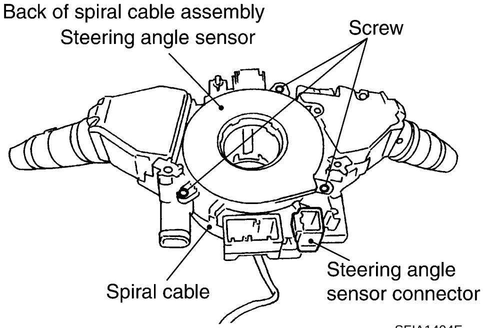

SFIA1404E

INSTALLATION

Install in the reverse order of removal.

NOTE:

After work, make sure to adjust neutral position of steering angle sensor. Refer to BRC-43, "Adjustment of Steering Angle Sensor Neutral Position" .

VDC OFF SWITCH

PFP:25145

Removal and Installation

AFS002QH

REMOVAL

1. Remove the instrument driver lower panel. Refer to IP-13, "Instrument Driver Lower Panel" .
2. Push the VDC OFF switch's pawls and remove the switch from the instrument driver lower panel.

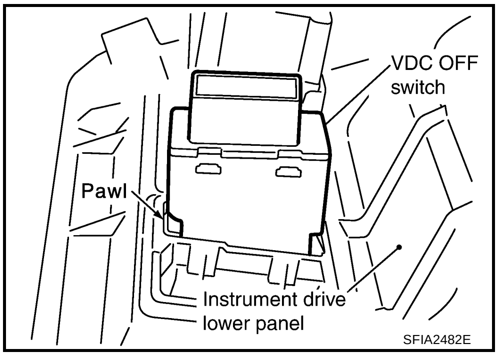

INSTALLATION

Installation is the reverse order of removal.